Panasonic

Compact Plain Paper Fax with DECT

Operating Instructions

Model No. **KX-FC195AL**

Please read these Operating Instructions before using the unit and save for future reference.

This model is designed to be used only in Australia.

How to use the operating instructions

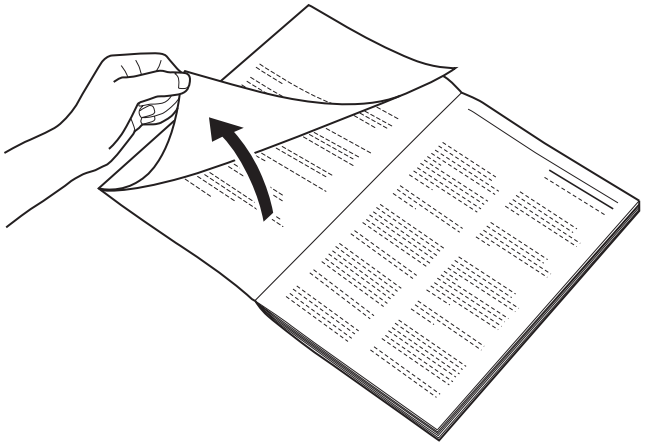

When following operating instructions, always keep the front cover page (next page) open so that you will find easy reference to the buttons.

Location of controls

Please keep this page open when following operating instructions.

Base unit

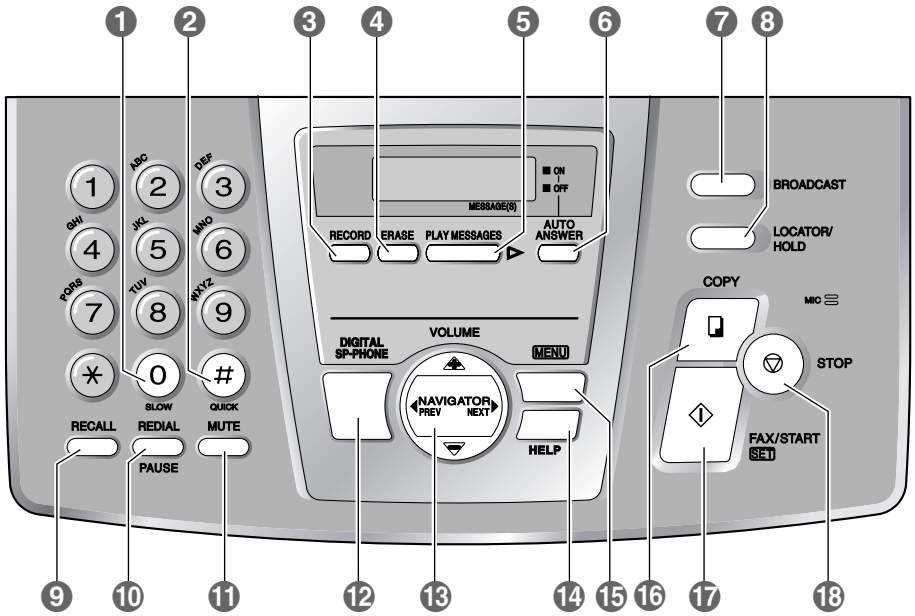

Keys

AUTO ANSWER 6
BROADCAST 7
COPY 16
DIGITAL SP-PHONE 12
ERASE 4
FAX/START 17
HELP 14
LOCATOR/HOLD 8
MENU 15
MUTE 11
NAVIGATOR 13
PLAY MESSAGES 5
QUICK 2
RECALL 9
RECORD 3
REDIAL/PAUSE 10
SET 17
SLOW 1
START 17
STOP 18
VOLUME 13

Handset

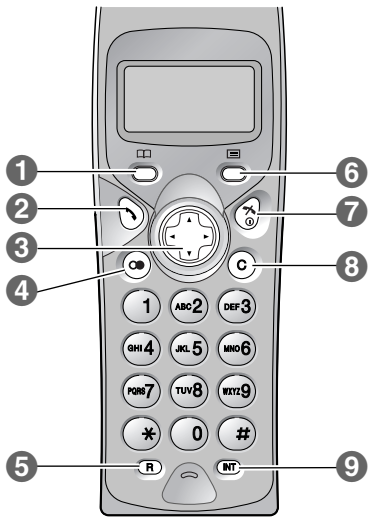

Keys

(Phonebook) 1
(Talk) 2
Navigator 3
(Redial/Pause) 4
R (Recall) 5
(Menu/OK) 6
(Off/Power) 7
C (Clear) 8
INT (Intercom) 9

Thank you for purchasing a Panasonic fax machine.

Things you should keep a record of

Attach your sales receipt here.

For your future reference

Date of purchase
Serial number (found on the rear of the unit)
Dealer's name and address
Dealer's telephone number

Caution:

- Note that the images of copied or received documents will remain on the used ink film. Use discretion when disposing of the used ink film.
- Do not rub or use an eraser on the printed side of recording paper, as the print may smear.
- This model is designed for use on the Australian network.

Copyright:

- This manual is copyrighted by Panasonic Communications Co., Ltd. (PCC) and its licensee. Under the copyright laws, this manual may not be reproduced in any form, in whole or part, without the prior written consent of PCC and its licensee.

© Panasonic Communications Co., Ltd. 2003

Warning:

- Please ensure that a separate telephone, not dependent on local power, is available for emergency use.
- This equipment will be inoperable when mains power fails.
- When a failure occurs which results in the internal parts becoming accessible,disconnect the power supply cord immediately and return this unit to an authorised service centre.
- Disconnect the telephone connection before disconnecting power connection prior to relocating the equipment, and reconnect the power first.
- To minimize the possibility of lightning damage, when you know that a thunderstorm is coming, we recommend that you:
  A. Unplug the telephone line cord from the phone jack.
  B. Unplug the power supply cord from the AC power outlet.
- No “000” or other calls can be made from this device during a mains power failure.
- The earcap on the handset is magnetised and may retain metallic objects.

Important information

Instructions to customer

Installation

Attached to this apparatus is an approval label. This label is evidence that it is a “Permitted Attachment” which has been authorised to be connected to your telephone service.
Conditions relating to connection and operation of this Permitted Attachment are contained in Telecommunications General By-Law 220 (5).

You are authorised to install this Permitted Attachment yourself by plugging it into the line socket of any regular telephone. You may connect it in place of your existing telephone or to any spare telephone socket installed in your premises.

To disconnect your existing telephone you must first remove its plug from the line socket. You can then insert the plug of your Permitted Attachment into the socket and use your equipment.

If the plug of your existing telephone cannot be readily removed, you will have to remove the screw securing it. To do this proceed as follows:

1. Loosen screw “A” sufficiently to remove the socket cover. (See Fig. 1.)
2. Remove screw “B” and withdraw the plug. (See Fig. 2.)
3. Replace screw “B”. (See Fig. 3.) Ensure that it screws completely into the socket recess. (If the screw is too long, increase the hole depth or replace the screw with one 5 mm shorter.)
4. Replace socket cover and tighten screw “A”. (See Fig. 4.)

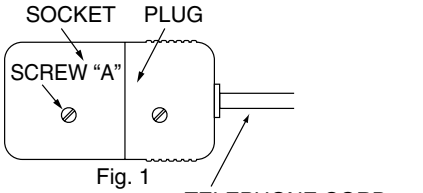

Fig. 1

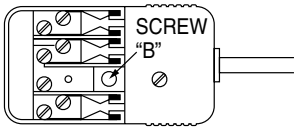

Fig. 2

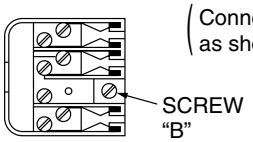

Fig. 3

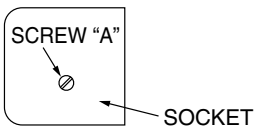

Fig. 4

If you are satisfied with the operation of your telephone service after plugging in your Permitted Attachment, your installation is completed.

You will be unable to connect this Permitted Attachment if your telephone service consists only of a wall phone or an old style telephone which is not connected by means of a modern plug and socket. In such cases a new socket will need to be installed.

Should the Permitted Attachment not operate when plugged into a socket, it is either faulty or unsuitable for operation with your telephone service. It should be returned to the store where purchased.

Service difficulties

If at any time a fault occurs on your telephone service carry out the following checks before you call for service:

- Disconnect the Permitted Attachment and try using the service with the normal telephone.
- If the telephone service then operates satisfactorily, the fault is in your Permitted Attachment. Leave the Permitted Attachment disconnected and report the fault to its supplier or agent to arrange for repair.
- If when using the telephone the service is still faulty, report the fault to “Service Difficulties and Faults” for attention.

You are required to keep this Permitted Attachment in good working order while it is connected to your telephone service. Its construction or internal circuit must not be modified in any way without permission.

WARNING

This cordless telephone system does not incorporate provision for secrecy of conversations. Appropriately tuned radio equipment and other cordless telephone systems in close proximity may be used by a third party to monitor and possibly interrupt conversations in progress when this system is on radio operation.

For best performance

Battery charge

Place the handset on the cradle of the base unit for about 7 hours before initial use.

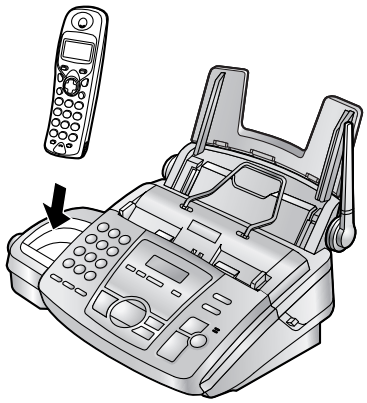

• For details, see page 20.

Operating distance and noise

Calls are transmitted between the base unit and the handset using wireless radio waves.
For maximum distance and noise-free operation, we recommend the following:

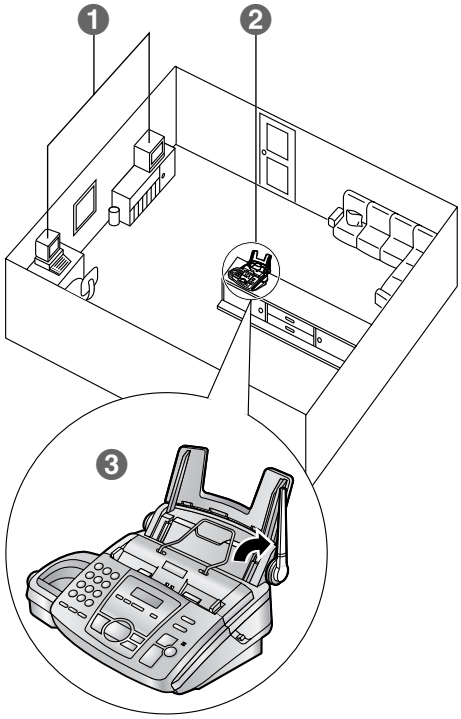

1. **Placing the unit away from electrical appliances such as a TV, radio, personal computer or another phone.**
2. **Placing the unit in a HIGH and CENTRAL location with no obstructions such as walls.**
3. **Raising the antenna vertically.**

Important safety instructions

When using this unit, basic safety precautions should always be followed to reduce the risk of fire, electric shock, or personal injury.

1. Read and understand all instructions.
2. Follow all warnings and instructions marked on this unit.
3. Unplug this unit from power outlets before cleaning. Do not use liquid or aerosol cleaners. Use a damp cloth for cleaning.
4. Do not use this unit near liquid-for example, near a bath tub, washbowl, sink, etc. Damp basements should also be avoided. The unit should be kept away from heat sources such as heaters, kitchen stoves, etc. It also should not be placed in rooms where the temperature is less than 5°C or greater than 35°C.
5. Place the unit securely on a stable surface. Serious damage and/or injury may result if the unit falls.
6. Do not cover slots and openings on the unit. They are provided for ventilation and protection against overheating. Never place the unit near radiators, or in a place where proper ventilation is not provided.
7. Use only the power source marked on the unit. If you are not sure of the type of power supplied to your home, consult your dealer or local power company.
8. For safety purposes this unit is equipped with a grounded plug. If you do not have this type of outlet, please have one installed. Do not defeat this safety feature by tampering with the plug.
9. Do not place objects on the power cord. Install the unit where no one can step or trip on the cord.
10. Do not overload power outlets and extension cords. This can result in the risk of fire or electric shock.
11. Never push any objects through slots in this unit. This may result in the risk of fire or electric shock. Never spill any liquid on the unit.
12. To reduce the risk of electric shock, do not disassemble this unit. Take the unit to an authorised service centre when service is required. Opening or removing covers may expose you to dangerous voltage or other risks. Incorrect reassembly can cause electric shock when the unit is subsequently used.
13. Unplug this unit from power outlets and refer servicing to an authorised service centre when the following conditions occur:
    A. When the power cord is damaged or frayed.
    B. If liquid has been spilled into the unit.
    C. If the unit has been exposed to rain or water.
    D. If the unit does not work normally by following the operating instructions. Adjust only controls covered by the operating instructions. Improper adjustment may require extensive work by an authorised service centre.
    E. If the unit has been dropped or physically damaged.
    F. If the unit exhibits a distinct change in performance.
14. During thunderstorms, avoid using telephones except cordless types. There may be a remote risk of an electric shock from lightning.
15. Do not use this unit to report a gas leak, when in the vicinity of the leak.

SAVE THESE INSTRUCTIONS

INSTALLATION:

- Never install telephone wiring during a lightning storm.
- Never install telephone jacks in wet locations unless the jack is specifically designed for wet locations.
- Never touch uninsulated telephone wires or terminals unless the telephone line has been disconnected at the network interface.
- Use caution when installing or modifying telephone lines.

WARNING:

- To prevent the risk of fire or electrical shock, do not expose this product to rain or any type of moisture.
- The cordless handset is magnetised and may retain small metallic objects.

OTHER INFORMATION:

- Keep the unit away from electrical noise generating devices, such as fluorescent lamps and motors.

- The unit should be kept free from dust, high temperature and vibration.
- The unit should not be exposed to direct sunlight.
- Do not place heavy objects on top of this unit.
- Do not touch the plug with wet hands.
- This unit should not be used near emergency/intensive care medical equipment and should not be used by people with pacemakers.
- Wipe the outer surface of the unit with a soft cloth. Do not use benzine, thinner, or any abrasive powder.

CAUTION:

Battery

To reduce the risk of fire or injury to persons, read and follow these instructions.

- Use only the battery(ies) specified.
- Do not dispose of the battery(ies) in a fire. They may explode. Check with local waste management codes for special disposal instructions.
- Do not open or mutilate the battery(ies). Released electrolyte is corrosive and may cause burns or injury to the eyes or skin. The electrolyte may be toxic if swallowed.
- Do not let the battery(ies) come in contact with conductive materials such as rings, bracelets and keys or the battery(ies) and/or conductor may overheat and cause burns.
- Charge the battery(ies) provided with or identified for use with this product only in accordance with the instructions and limitations specified in this manual.

1. Introduction and Installation

Accessories
1.1 Included accessories 10
1.2 Accessory information 11
Finding the Controls
1.3 Overview 12
1.4 Description of base unit buttons 12
1.5 Description of handset buttons 13
1.6 Description of handset display 13
Installation (Base Unit)
1.7 Before installation 14
1.8 Ink film 14
1.9 Paper tray 16
1.10 Metal recording paper guide 16
1.11 Recording paper 17
Installation (Handset)
1.12 Battery installation 17
1.13 Battery replacement 17
1.14 Turning the handset power on/off 18

2. Preparation

Connections and Setup
2.1 Connections 19
2.2 Battery charge 20
Help Button
2.3 Base unit help function 21
Volume
2.4 Adjusting handset volume 21
2.5 Adjusting base unit volume 22
Initial Programming
2.6 Date and time 23
2.7 Your logo 24
2.8 Your fax number 26

3. Telephone

Making and Answering Calls
3.1 Making phone calls 27
3.2 Answering phone calls 28
3.3 Handset locator 29
Automatic Dialling (Handset)
3.4 Storing names and telephone numbers into the phonebook 29
3.5 Making a phone call using the phonebook 30
3.6 Hot key 30
Automatic Dialling (Base Unit)
3.7 Storing names and telephone numbers into the navigator directory 31
3.8 Making a phone call using the navigator directory 32
Caller ID (Handset Only)
3.9 Caller ID service (Handset only) 32
3.10 Viewing and calling back using caller information (Handset only) 33
3.11 Storing caller information into the phonebook (Handset only) 34

4. Fax

Sending Faxes
4.1 Sending a fax manually 35
4.2 Documents you can send 36
4.3 Sending a fax using the navigator directory 36
4.4 Broadcast transmission 37
Receiving Faxes
4.5 Receiving a fax manually 38
4.6 Receiving a fax automatically 39
4.7 Receive polling (retrieving a fax placed on another fax machine) 40

5. Distinctive Ring

Distinctive Ring
5.1 Using with the ring detection feature 41

6. Copy

Copying
6.1 Making a copy 42

7. Answering Device

Greeting
7.1 Recording your greeting message 44
Memo Message
7.2 Leaving a message for others or yourself 44
Incoming Messages
7.3 Listening to recorded messages 45
Remote Operation
7.4 Operating from a remote location 46
Voice Mailbox
7.5 Allowing callers to leave private messages 47
7.6 Recording your mailbox greeting messages 48
7.7 Listening to recorded mailbox messages 48
7.8 Listening to recorded mailbox messages from a remote location 49
Option
7.9 Transferring recorded messages to another telephone 49

8. Programmable Features

Features (Base Unit)
8.1 Base unit programming **51**
8.2 Basic features **51**
8.3 Advanced features **52**
Features (Handset)
8.4 Handset programming **55**
8.5 Handset programming using the base unit PIN **60**

9. Options

Multi - Units
9.1 Operating additional units **62**
9.2 Registering a handset to a base unit **62**
9.3 Selecting the ringer mode **63**
9.4 Intercom between handsets **64**
9.5 Transferring calls between handsets/ Conference call **64**

10.Help

Error Messages
10.1 Error messages – Reports **65**
10.2 Error messages – Base unit display . **65**
Frequently Asked Questions
10.3 When a function does not work, check here **66**
Jams
10.4 Recording paper jam **70**
10.5 Document jams – sending **72**
Cleaning
10.6 Document feeder cleaning **73**
10.7 Thermal head cleaning **73**

11.General Information

Printed Reports
11.1 Reference lists and reports **75**
Specifications
11.2 Technical data about this product **76**

12.Index

12.1 Index **79**

1.1 Included accessories

No.	Item	Quantity	Specifications
①	Power cord	1	----------
②	Telephone line cord	1	----------
③	Cordless handset	1	----------
④	Battery cover	1	----------
⑤	Rechargeable batteries	2	AAA size
⑥	Paper tray	1	----------
⑦	Metal recording paper guide	1	----------
⑧	Ink film (10 metres long)	1	prints about 28 A4-sized pages.*1
⑨	Operating instructions	1	----------
⑩	Quick start sheet	1	----------

*1 For replacement film, see page 11.

Note:

- If any items are missing or damaged, check with the place of purchase.
- Save the original carton and packing materials for future shipping and transportation of the unit.

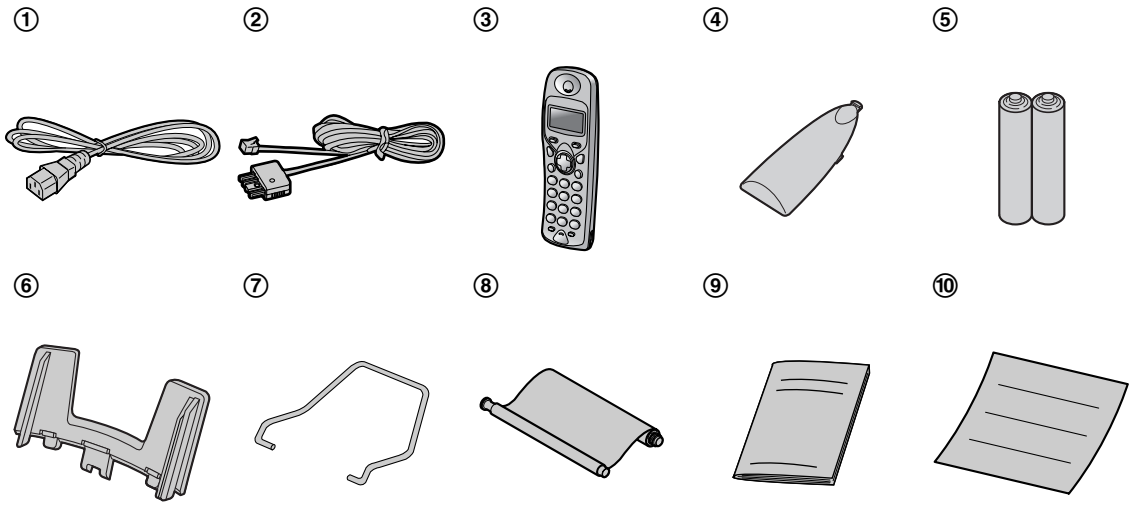

1.2 Accessory information

1.2.1 Available accessories

Model No.	Item	Specifications/Usage
KX-FA53A	Replacement film*1	50 m × 1 roll (prints about 140 A4-sized pages.)
KX-FA55A	Replacement film*1	50 m × 2 rolls (Each roll will print about 140 A4-sized pages.)
P03P	Rechargeable batteries	Nickel metal hydride (Ni-MH) batteries.
P03H	Rechargeable batteries	Nickel cadmium (Ni-Cd) batteries.
KX-A142AL	Additional handset*2	----------

*1 We recommend that you buy a full-size replacement film for continuous use of your unit. Please use genuine Panasonic replacement film. **The ink film is not reusable. Do not rewind and use the ink film again.**

*2 Additional handsets have answering device controls printed on their cases, however, remote operation of the base unit's answering device is not possible.

1.3 Overview

1.3.1 Base unit

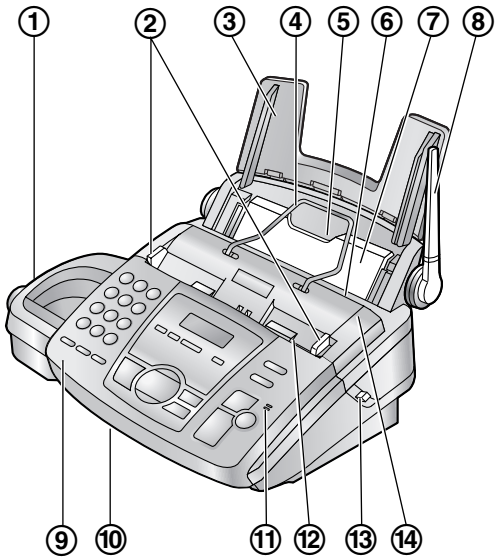

① **Speaker**
② **Document guides**
③ **Paper tray**
④ **Metal recording paper guide**
⑤ **Recording paper entrance**
⑥ **Recording paper exit**
⑦ **Tension plate**
⑧ **Antenna**
⑨ **Front cover**
⑩ **Document exit**
⑪ **Microphone**
⑫ **Document entrance**
⑬ **Green button (Back cover release button)**
⑭ **Back cover**

1.3.2 Handset

① **Receiver**
② **Microphone**

1.4 Description of base unit buttons

- Keep the front cover page open for button locations.

❶ **【SLOW】**
- To slow down message playback (page 45).

❷ **【QUICK】**
- To speed up message playback (page 45).

❸ **【RECORD】**
- To record your greeting message (page 44).

❹ **【ERASE】**
- To erase messages (page 45).

❺ **【PLAY MESSAGES】**
- To play messages (page 45).

❻ **【AUTO ANSWER】**
- To turn on/off the auto answer setting (page 38, 39).

❼ **【BROADCAST】**
- To transmit a document to multiple parties (page 37).

❽ **【LOCATOR/HOLD】**
- To locate the handset (page 29).
- To put a call on hold (page 28).

❾ **【RECALL】**
- To access special telephone services or for transferring extension calls.

❿ **【REDIAL/PAUSE】**
- To redial the last number dialled from the base unit (page 28).
- To insert a pause during dialling.

⓫ **【MUTE】**
- To mute your voice to the other party during a conversation. Press this button again to resume the conversation.

⓬ **【DIGITAL SP-PHONE】**
- For speakerphone operation (page 28, 29).

⓭ **【NAVIGATOR】【VOLUME】**
- To adjust volume (page 22).
- To search for a stored entry (page 32, 36).
- To select features or feature settings during programming (page 51).
- To navigate to the next operation.

⓮ **【HELP】**
- To print a quick reference (page 21).

⓯ **【MENU】**
- To initiate or exit programming.

⓰ **【COPY】**
- To initiate copying (page 42).

⓱ **【FAX/START】【SET】**
- To initiate fax transmission or reception.
- To store a setting during programming.

⓲ **【STOP】**
- To stop an operation or programming.

1.5 Description of handset buttons

- Keep the front cover page open for button locations.

❶ **【📖】(Phonebook)**
- To access the phonebook (page 30).

❷ **【】(Talk)**
- To make/answer calls (page 27, 28).

❸ **Navigator**
- To adjust volume (page 21).
- To search for a stored entry (page 30).
- To select features or feature settings during programming (page 55).
- To view caller information (page 33).

❹ **【】(Redial/Pause)**
- To redial one of the last 10 numbers dialled from the handset (page 27).
- To insert a pause during dialling.

❺ **【R】(Recall)**
- To access special telephone services or for transferring extension calls.

❻ **【】(Menu/OK)**
- To initiate programming.
- To store a setting during programming.
- To lock/unlock the handset buttons (page 27).

❼ **【】(Off/Power)**
- To turn power on/off (page 18).
- To hang up (page 27, 28).
- To stop viewing caller information (page 33).
- To exit programming.

❽ **【C】(Clear)**
- To clear a digit (page 23).

❾ **【INT】(Intercom)**
- To page or locate another handset.

1.6 Description of handset display

Icons

Icons are used to show the status of the handset. The icons and their meanings are as follows.

Icon	Meaning
	Within range of base unit.
(flashing)	Out of range / No registration / No power on base unit.
	The handset is in use (e.g. intercom mode).
(flashing)	The handset is being paged.
	Making or answering calls.
	Incoming call notification.
	Phonebook mode.
	Setting mode.
(flashing)	Battery strength is high (when the handset is on the base unit).
	Battery strength is high (when the handset is off the base unit).
	Battery strength is medium.
	Battery strength is low.
(flashing)	Needs to be charged.
	Call BAR on (page 58).
	Direct call on (page 58).
	Key lock on (page 27).

Icon	Meaning
	Ringer volume off (page 21).

Digital symbols
The characters are shown on the handset display as follows.

A	B	C	D	E	F	G	H	I	J	K	L	M	N
O	P	Q	R	S	T	U	V	W	X	Y	Z	1	2
3	4	5	6	7	8	9	*	0	#	-	/	[	]
,	/												

1.7 Before installation

1.7.1 Removing the shipping tape

Remove the shipping tape (①).

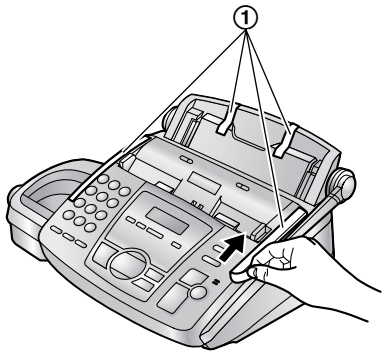

1.7.2 Raising the antenna

Raise the antenna vertically.

1.8 Ink film

1.8.1 Installing the ink film

1 Open the front cover (①) by pulling up the centre part (②).

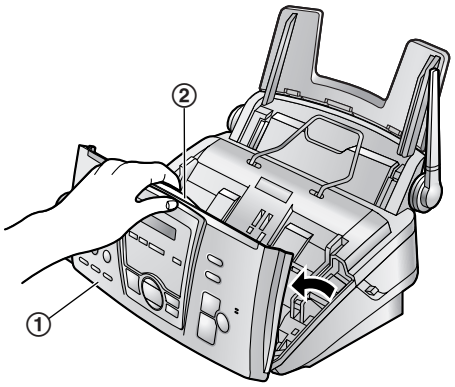

2 Release the back cover by pushing the green button (①) on the right side of the unit.
OR
Release the back cover by pushing the green lever (②) in the unit.

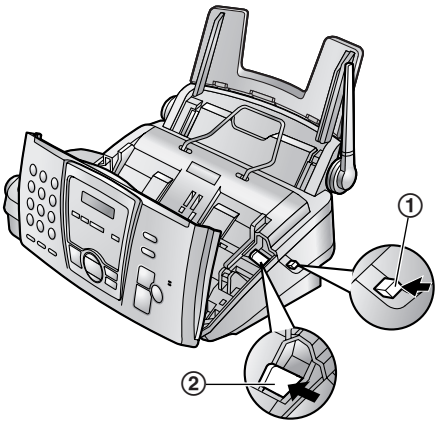

3 Open the back cover (①).

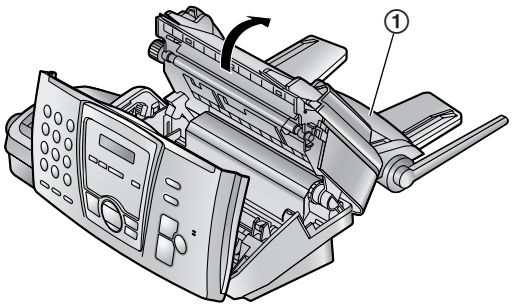

4 Insert the blue core of the front ink film roll (①) into the right slot of the unit (②). Insert the gear with the blue core (③) into the left slot of the unit (④). Insert the rear ink film roll (⑤).

- The ink film is safe to touch, and will not rub off on your hands like carbon paper.

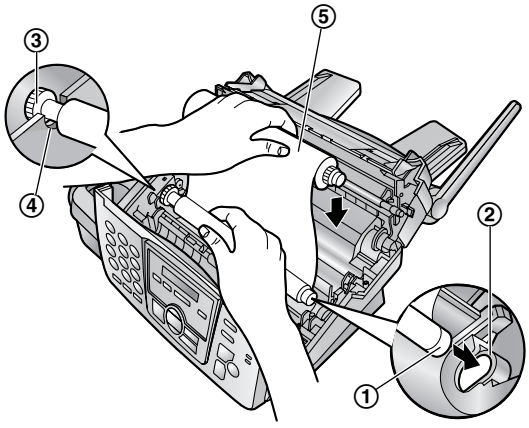

5 Turn the gear with the blue core (①) in the direction of the arrow.

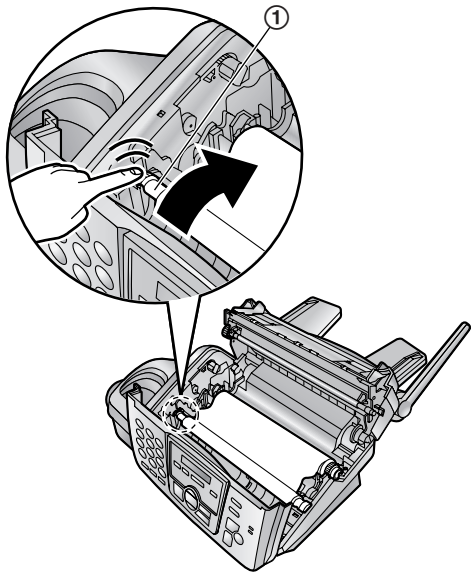

- Make sure that the ink film is wrapped around the blue core (②) at least once.

Correct

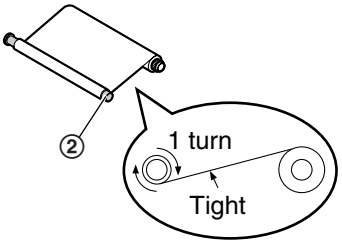

Incorrect

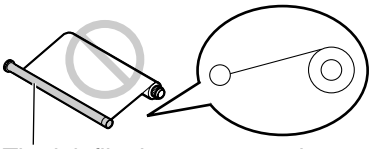

The ink film is not wrapped around the blue core.

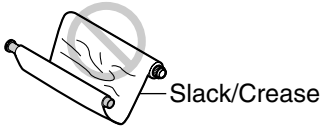

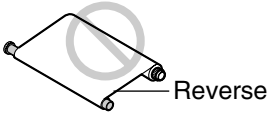

6 First close the back cover securely (①) by pushing down on the dotted area at both ends (②). Then close the front cover securely (③).

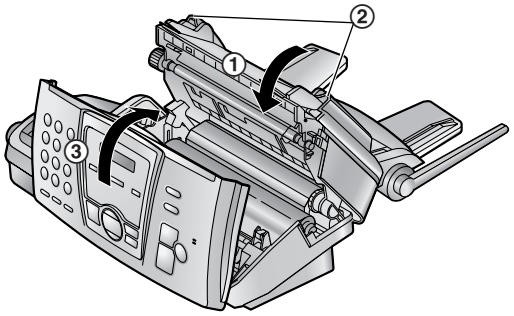

1.8.2 Replacing the ink film

The included film roll is a starter ink film. To ensure that the unit operates properly, we recommend the use of Panasonic replacement film. See page 11 for accessory information.

- We cannot be responsible for any damage to the unit or degradation of print quality which

may occur from the use of non-Panasonic replacement film.

1 Open the covers (see steps 1 to 3 on page 14).

2 Pull out the blue gear (①) and remove the used ink film (②). Remove the used core (③).

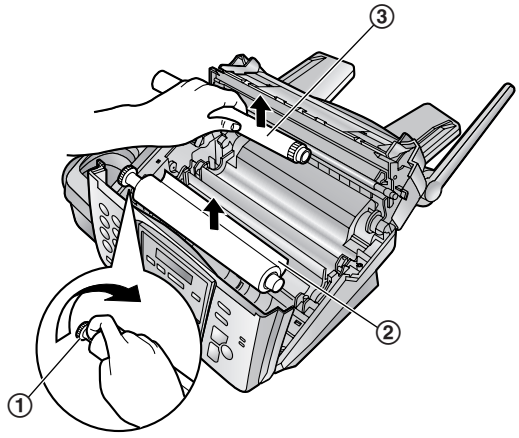

3 Remove the stoppers (①) and tags (②) from the new ink film (③).

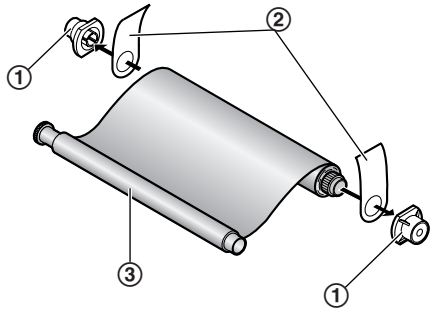

4 Insert the ink film and close the covers (see steps 4 to 6 on page 15).

1.9 Paper tray

Insert the tab (①) on the paper tray (②) into the slot on the back of the unit (③).

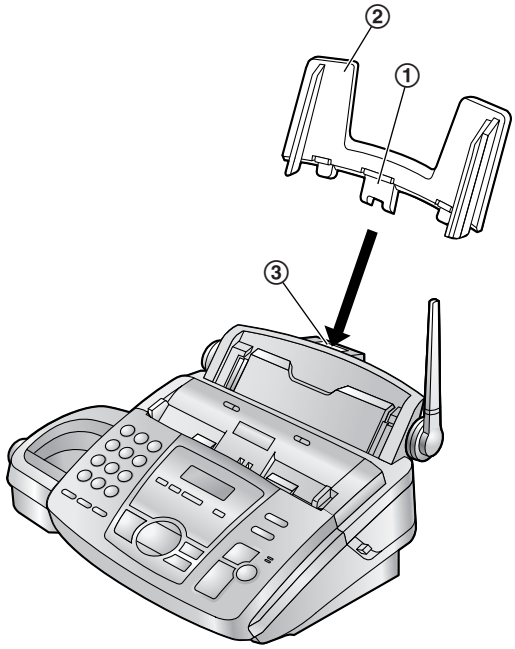

1.10 Metal recording paper guide

Attach the metal recording paper guide (①) into the slots on the recording paper exit (②).

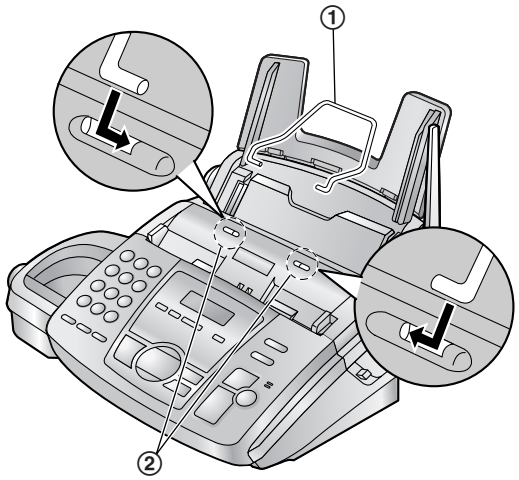

- The recording paper will be ejected from the top of the unit after printing. The metal recording paper guide prevents the printed paper from curling.

1.11 Recording paper

The unit can hold up to 50 sheets of 80 g/m^2 paper. See the note for paper specifications (page 77).

1 Before inserting a stack of paper, fan the paper to prevent paper jams.

2 Pull the tension plate forward (①) and hold open while inserting the paper.

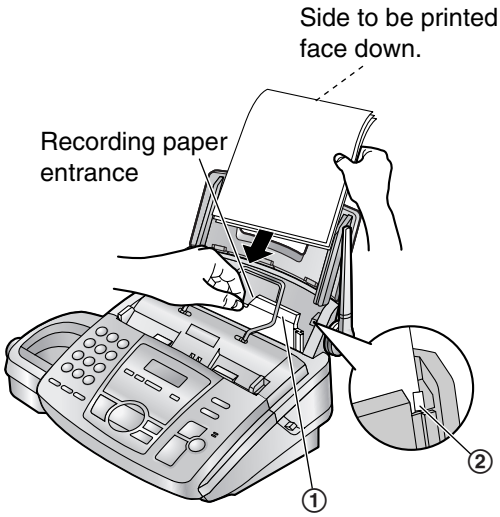

- The paper should not be over the tab (②).
- If the paper is not inserted correctly, readjust the paper, or the paper may jam.

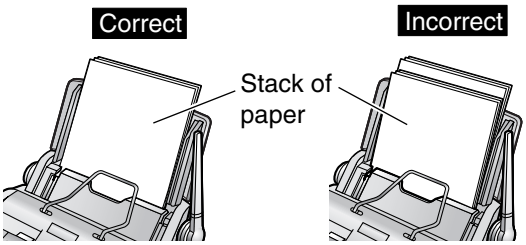

1.12 Battery installation

1 Insert the batteries negative (–) terminal first.

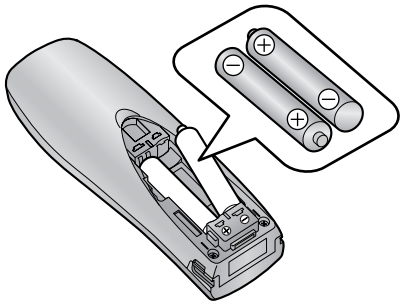

2 Close the battery cover.

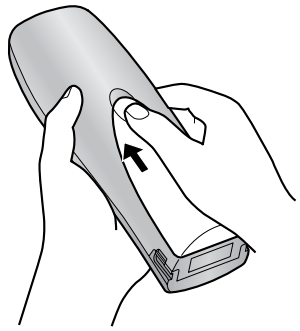

1.13 Battery replacement

If flashes and/or the handset beeps even when the handset batteries has been fully charged, both batteries must be replaced. **Please use only Panasonic batteries.** See page 11 for accessory information.
When replacing the batteries, ensure that the correct battery type is selected (page 59).

Important:

- **Only use rechargeable batteries. If you install non-rechargeable batteries and start charging, the batteries may leak electrolyte.**
- **Do not mix old and new batteries.**
- **Use only 2 nickel metal hydride (Ni-MH) batteries or 2 nickel cadmium (Ni-Cd) batteries. Do not mix battery types.**

1 Press the notch on the cover firmly and slide it in the direction of the arrow.

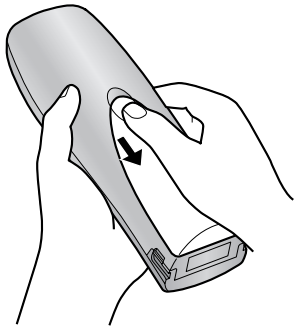

2 Remove the batteries positive (+) terminal first. Replace 2 batteries. See the battery installation on page 17.

1.14 Turning the handset power on/off

1.14.1 Power on

Press 【✆⏻】 for more than 1 second.

- The display will change to the standby mode.

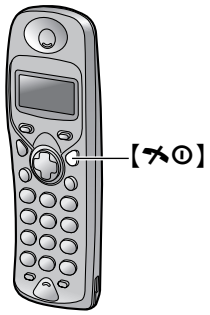

1.14.2 Power off

Press 【✆⏻】 for more than 2 seconds.

- The display will go blank.

2.1 Connections

Plug in the power cord and the telephone line cord.

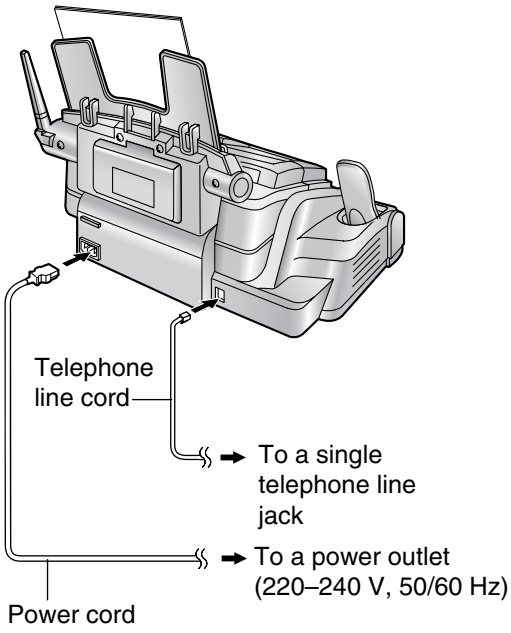

Caution:

- **The power cord must remain connected at all times.**
- **Never install telephone wiring during a lightning storm.**
- **When you operate this product, the power outlet should be near the product and easily accessible.**
- **Be sure to use the telephone line cord included in this unit.**
- **Do not extend the telephone line cord.**

Note:

- If any other device is connected on the same line, this unit may disturb the network condition of the device.
- Do not connect an answering machine to the same telephone line. If connected, set the automatic answer feature to off by pressing **【AUTO ANSWER】**.

- If you use the unit with a computer and your internet provider instructs you to install a filter, please connect it as follows.

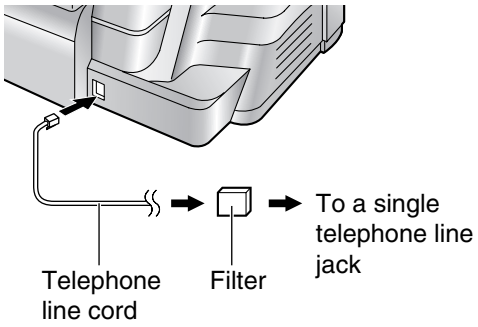

2.2 Battery charge

Place the handset on the cradle of the base unit for about 7 hours before initial use.

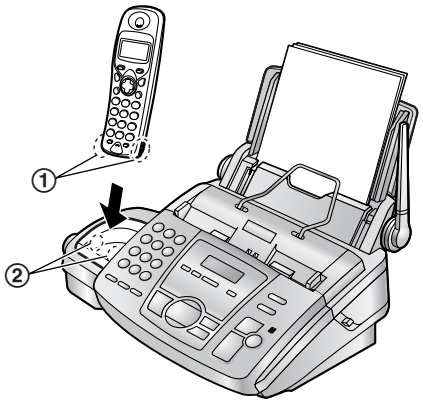

Note:

- Clean the handset charge contacts (①) and the base unit charge contacts (②) with a dry cloth once a month, or the batteries may not charge properly.

Battery strength

- During charging, the battery icon on the handset display is shown as follows.

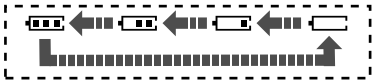

When the batteries are fully charged, flashes.
The handset is automatically turned on when placed on the base unit.
In normal use, the handset and the base unit should be powered on at all times.

- While the handset is off the base unit, the battery icon is shown as follows.

Battery icon	Battery strength
	High
	Medium
	Low
	Needs to be recharged

Battery life

– When using fully charged nickel metal hydride (Ni-MH) batteries (700 mAh):
Talk time: Approx. 10 hours
Standby time: Approx. 120 hours

– When using fully charged nickel cadmium (Ni-Cd) batteries (250 mAh):
Talk time: Approx. 4 hours
Standby time: Approx. 40 hours

- Times indicated are for peak performance.
- The batteries cannot be overcharged.
- For maximum battery life, it is recommended that the handset is not recharged until flashes or the handset beeps intermittently while it is in use.
- Battery life is dependent on usage conditions and ambient temperature.

Important:

- **To prevent battery consumption, be sure to press [ ] if a busy tone sounds when/after using the handset.**
  e.g., After receiving fax documents using the handset.

2.3 Base unit help function

The unit contains helpful information which can be printed for quick reference.

Send guide:
How to send faxes with the voice guide. (This information will not be printed.)

Quick set up:
How to set the date, time, your logo and fax number.

Feature list:
How to program the features.

Directory:
How to store names and numbers in the navigator directory and how to dial them.

TAD operation:
How to use the answering device.

Fax receiving:
How to set the unit to receive faxes.

Copier:
How to use the copier function.

Reports:
List of available reports.

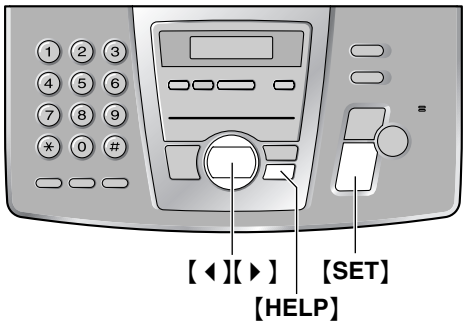

1 Press **【HELP】**.

2 Press **【◀】** or **【▶】** repeatedly to display the desired item.

3 Press **【SET】**.
- The selected item will be printed.

2.4 Adjusting handset volume

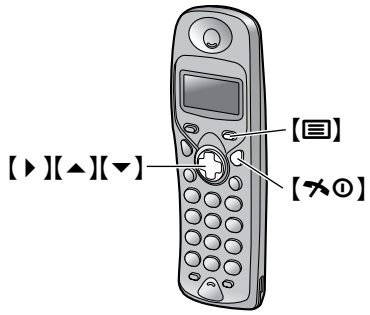

2.4.1 Ringer volume

7 levels (high to off) are available.
The default setting is high.

1 Press **【≡】**.

NEW PHONE

2 Press **【▲】** or **【▼】** repeatedly to display the following.

SETTING HS

3 Press **【▶】**.

TIME ALARM

4 Press **【▲】** or **【▼】** repeatedly to display the following.

RINGER OPT

5 Press **【▶】**.

6 Press **【▲】** or **【▼】** repeatedly to display the following.

RINGER VOL

7 Press **【▶】**.

VOL 000000

8 Press **【▲】** or **【▼】** repeatedly to select the desired volume.
- The current ringer will sound.

9 Press **【▶】** or **【≡】**.

RINGER VOL

10 Press **【C】** to exit the program.

Note:

- When the ringer volume is set to off, the following will be displayed.

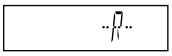

Ringer pattern

- You can select one of 20 ringer patterns for external calls, internal calls, paging and alarm (page 56).

2.4.2 Handset receiver volume

3 levels (high/medium/low) are available.
While talking, press 【▲】 or 【▼】.
The default setting is medium.

2.5 Adjusting base unit volume

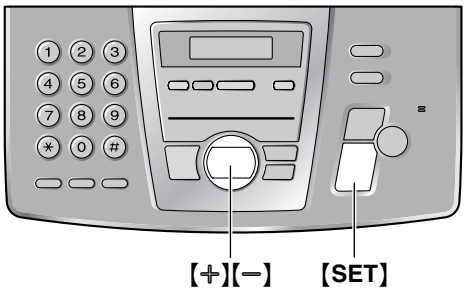

2.5.1 Ringer volume

4 levels (high/medium/low/off) are available.
While the unit is idle, press 【+】 or 【−】.
The default setting is off.

- If any documents are in the document entrance, you cannot adjust the ringer volume. Confirm that there are no documents in the entrance.
- To turn the ringer off, press 【−】 repeatedly until "RINGER OFF= OK?" is displayed, then press **【SET】**.

Ringer pattern

- You can select one of three ringer patterns for external calls (feature #17, page 52).

2.5.2 Speaker volume

8 levels (high to low) are available.
While using the speakerphone, press 【+】 or 【−】.

2.5.3 Fax voice guidance volume

9 levels (high to off) are available.
While listening to fax voice guidance, press 【+】 or 【−】.

2.5.4 Answering device volume

9 levels (high to off) are available.
While listening to recorded messages, press 【+】 or 【−】.

2.6 Date and time

You must set the date and time for both the handset and the base unit.

2.6.1 Setting the time and date on the handset

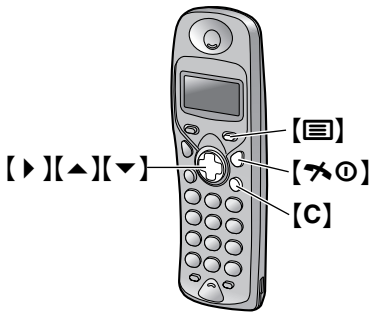

Important:

- **Confirm that the power cord is connected.**
- **Ensure that Ψ is not flashing.**
- **If a power failure occurs, the time and date for the handset needs to be reset.**

1 Press 【☰】.

NEW PHONE

2 Press 【▲】 or 【▼】 repeatedly to display the following.

SETTING DS

3 Press 【▶】.

INPUT CODE

4 Press 【✳】.

* _ _ : _ _

5 Enter the current hour/minute by selecting 2 digits for each.
Example: 15:15 (24 hour clock entry)
Press **【1】【5】【1】【5】**.

* 15:15

- If you make a mistake, press **【C】**. Digits are cleared from the right.

6 Press 【▶】 or 【☰】.

SETTING DS

7 Press 【▶】.

INPUT CODE

8 Press 【✳】 2 times.

** _ _ - _ _ - _ _

9 Enter the current day/month/year by selecting 2 digits for each.
Example: 10 August, 2003
Press **【1】【0】【0】【8】【0】【3】**.

** 10-08-03

- If you make a mistake, press **【C】**. Digits are cleared from the right.

10 Press 【▶】 or 【☰】.

SETTING DS

11 Press 【✂⏻】 to exit the program.

2.6.2 Setting the date and time on the base unit

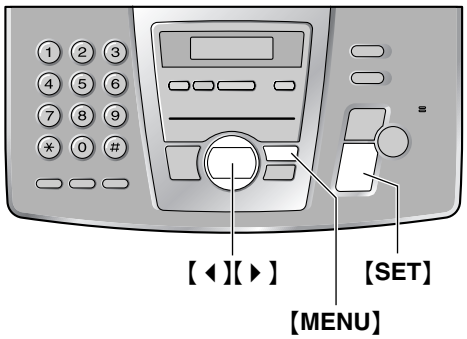

1 Press **【MENU】**.

```
SYSTEM SET UP
PRESS NAVI.[◀ ▶]
```

2 Press 【◀】 or 【▶】 repeatedly to display the following.

```
SET DATE & TIME
      PRESS SET
```

3 Press **【SET】**.

- Cursor (▮) will appear on the display.

```
D:01/M:01/Y:03
TIME: 12:00AM
```

4 Enter the current day/month/year by selecting 2 digits for each.

Example: 10 August, 2003
Press **[1][0] [0][8] [0][3]**.

```
D:10/M:08/Y:03
TIME: 12:00AM
```

5 Enter the current hour/minute by selecting 2 digits for each. Press **[✳]** to select "AM" or "PM".
Example: 3:15PM (12 hour clock entry)

1. Press **[0][3] [1][5]**.

```
D:10/M:08/Y:03
TIME: 03:15AM
```

2. Press **[✳]** repeatedly to display "PM".

```
D:10/M:08/Y:03
TIME: 03:15PM
```

6 Press **[SET]**.
- The next feature will be displayed.

7 Press **[MENU]** to exit the program.

Note:
- This information will be printed on each page transmitted from your unit.
- The accuracy of the clock is approximately ±60 seconds a month.

To correct a mistake

Press **[◀]** or **[▶]** to move the cursor to the incorrect number, and make the correction.

24 hour clock entry

If you select the clock display to "24H" (feature #19, page 52), enter the clock in step 5 as follows:
Example: 15:15 (3:15PM)
Press **[1][5][1][5]**.

2.7 Your logo

The logo can be your company, division or name.

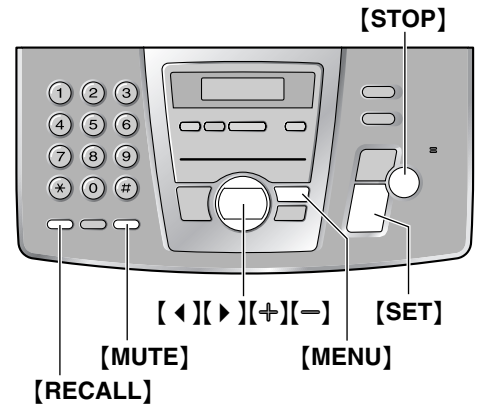

1 Press **[MENU]**.

```
SYSTEM SET UP
PRESS NAVI.[◀ ▶]
```

2 Press **[◀]** or **[▶]** repeatedly to display the following.

```
YOUR LOGO
        PRESS SET
```

3 Press **[SET]**.
- Cursor (■) will appear on the display.

```
LOGO=■
```

4 Enter your logo, up to 30 characters. See the character table on page 25 for details.

5 Press **[SET]**.
- The next feature will be displayed.

6 Press **[MENU]** to exit the program.

Note:
- This information will be printed on each page transmitted from your unit.

To enter your logo
Example: "BILL"

1. Press **[2]** 2 times.

```
LOGO=B
```

2. Press **[4]** 3 times.

```
LOGO=BI
```

3. Press 【5】 3 times.

```
LOGO=BIL
```

4. Press 【▶】 to move the cursor to the next space and press 【5】 3 times.

```
LOGO=BILL
```

To change capital or lower-case letters

Pressing the 【#】 key will change to capital or lower-case alternately.

1. Press 【2】 2 times.

```
LOGO=B
```

2. Press 【4】 3 times.

```
LOGO=BI
```

3. Press 【#】.

```
LOGO=Bi
```

4. Press 【5】 3 times.

```
LOGO=Bil
```

To correct a mistake

Press 【◀】 or 【▶】 to move the cursor to the incorrect character, and make the correction.

To delete a character

Press 【◀】 or 【▶】 to move the cursor to the character you want to delete and press 【STOP】.

To insert a character

1. Press 【◀】 or 【▶】 to move the cursor to the position to the right of where you want to insert the character.
2. Press 【MUTE】 to insert a space and enter the character.

To select characters with the dial keypad

Keys	Characters
【1】	1 [ ] { } + − / = , . _ ` : ; ? |
【2】	A B C a b c 2
【3】	D E F d e f 3
【4】	G H I g h i 4
【5】	J K L j k l 5
【6】	M N O m n o 6
【7】	P Q R S p q r s 7
【8】	T U V t u v 8
【9】	W X Y Z w x y z 9
【0】	0 ( ) < > ! " # $ % & ¥ ∗ @ ^ ' →
【#】	To change capital or lower-case letter.
【RECALL】	**Hyphen** button
【MUTE】	**Insert** button
【STOP】	**Delete** button

Note:

- To enter another character located on the same number key, press 【▶】 to move the cursor to the next space.

To select characters using 【+】 or 【−】

Instead of pressing the dial keys, you can select characters using 【+】 or 【−】.

1. Press 【+】 or 【−】 repeatedly to display the desired character.
2. Press 【▶】 to move the cursor to the next space.
   - The character displayed is inserted.
3. Return to step 1 to enter the next character.

Display order of characters

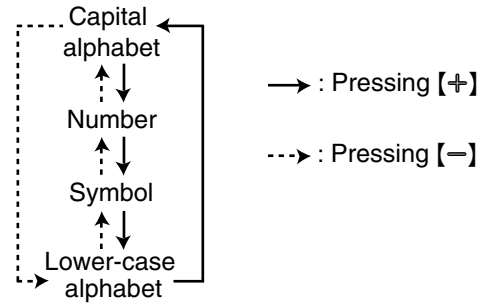

2.8 Your fax number

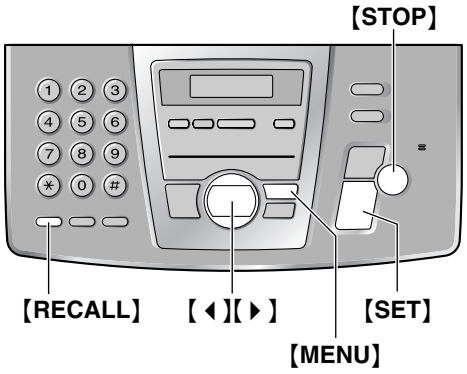

1 Press **【MENU】**.

```
SYSTEM SET UP
PRESS NAVI.[◀ ▶]
```

2 Press **【◀】** or **【▶】** repeatedly to display the following.

```
YOUR FAX NO.
       PRESS SET
```

3 Press **【SET】**.
- Cursor (▮) will appear on the display.

```
NO.=▮
```

4 Enter your fax number, up to 20 digits.

Example:
```
NO.=1234567▮
```

5 Press **【SET】**.
- The next feature will be displayed.

6 Press **【MENU】** to exit the program.

Note:
- This information will be printed on each page transmitted from your unit.
- The **【✳】** button enters a "+" and the **【#】** button enters a space.
  Example: +64 9 1234567
  Press **【✳】【6】【4】【#】【9】【#】【1】【2】【3】【4】【5】【6】【7】**.
- To enter a hyphen in a telephone number, press **【RECALL】**.

To correct a mistake

Press **【◀】** or **【▶】** to move the cursor to the incorrect number, and make the correction.

To delete a number

Press **【◀】** or **【▶】** to move the cursor to the number you want to delete and press **【STOP】**.

3.1 Making phone calls

3.1.1 With the handset

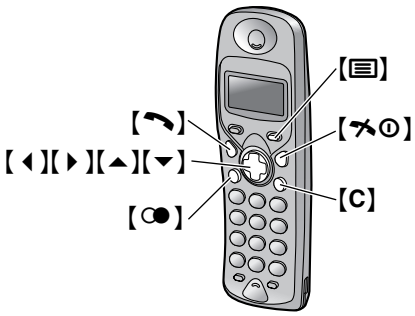

Important:

- **To prevent battery consumption, be sure to press 【⏻】 if a busy tone sounds when/after using the handset.**

1 Lift the handset and press 【C】.

2 Dial the telephone number.

3 When finished talking, press 【⏻】 or place the handset on the base unit.

To redial the last number dialled from the handset

Press 【C】, then press 【●】.

To redial using the redial list

The last 10 numbers dialled with the handset are stored in the redial list.

1. Press 【●】.
   - The last number dialled is displayed.
2. Press 【▲】 or 【▼】 repeatedly to select the number.
   - To exit the list, press 【⏻】.
3. Press 【C】.

To edit a number in the redial list before calling back

1. Press 【●】.
2. Press 【▲】 or 【▼】 repeatedly to select the number.
3. Press 【▶】.
4. Press 【▲】 or 【▼】 repeatedly to display "EDIT CALL NO".
5. Press 【▶】.
   - The first digit of the number flashes.
6. Press 【◀】 or 【▶】 to move to the position to the right of where you want to edit the number.
7. Edit the number.
   - To clear a digit, press 【C】.
8. Press 【C】.

To erase numbers in the redial list

1. Press 【●】.
2. Press 【▲】 or 【▼】 repeatedly to select the number.
3. Press 【▶】.
4. Press 【▲】 or 【▼】 repeatedly to display "CLEAR".
   - If you want to erase all numbers in the list, select "ALL CLEAR".
5. Press 【▶】.
6. Press 【▲】 or 【▼】 to select "YES".
7. Press 【▶】 or 【≡】.
   - To erase other numbers, repeat steps 2 to 7.
8. Press 【⏻】.

To store a number from the redial list into the phonebook

Numbers in the redial list can be stored into the phonebook (page 29).

1. Press 【●】.
2. Press 【▲】 or 【▼】 repeatedly to select the number.
3. Press 【▶】.
4. Press 【▲】 or 【▼】 repeatedly to display "SAVE TEL NO".
5. Press 【▶】.
   - The first 2 digits are the index number.
6. Press 【≡】.
7. Enter the name, up to 9 characters (see the character table on page 29).
8. Press 【≡】.

Key lock

You can lock the handset dialling buttons. Only incoming calls are accepted while the key lock is on. **Emergency calls cannot be made until key lock is cancelled.**

To turn on key lock, press and hold 【≡】 for more than 2 seconds.

- A beep will sound and the following will be displayed.

To turn off key lock, press and hold 【▤】 for more than 2 seconds.

Note:

- The key lock is cancelled if the handset is turned off.

3.1.2 With the base unit

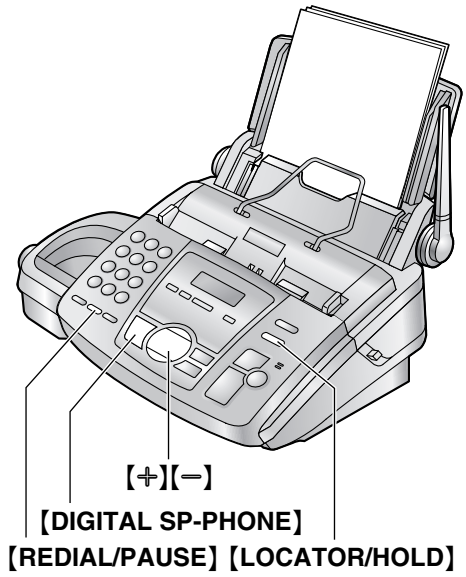

1 Press **【DIGITAL SP-PHONE】**.

2 Dial the telephone number.

- When the other party answers, talk into the microphone.

3 When finished talking, press **【DIGITAL SP-PHONE】**.

To switch a call to the handset

1. Press **【LOCATOR/HOLD】** to put a call on hold.

- To release the hold, press **【DIGITAL SP-PHONE】**.

2. Press 【✆】 on the handset.

Note:

- When a call is on hold:
  - If you do not press a button for more than 6 minutes, a beep will sound every 30 seconds.
  - If you do not press a button for more than 10 minutes, the line will be disconnected.
- You cannot put a call on hold when handset(s) is not hung up. Press 【✆ⓞ】.
- You cannot switch the call from the handset to the base unit.
- If you set the call BAR feature (page 58) or call restriction feature (page 60), do not press the dialling buttons in step 2.
- Do not switch calls to the handset when direct call (page 58) is turned on.

To redial the last number dialled from the base unit

Press **【DIGITAL SP-PHONE】**, then press **【REDIAL/PAUSE】**.

Speakerphone operation

- Use the speaker in a quiet room.
- Adjust the speaker volume using 【+】 or 【−】.

3.2 Answering phone calls

3.2.1 With the handset

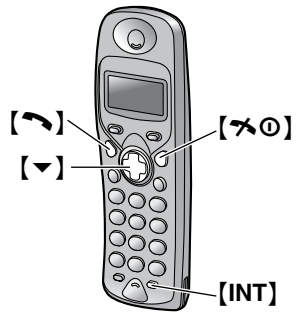

Important:

- **To prevent battery consumption, be sure to press 【✆ⓞ】 if a busy tone sounds when/after using the handset.**

1 Lift the handset and press 【✆】 when the unit rings.

- You can also answer a call by pressing any dial key 0 to 9, 【✳】, 【#】, or **【INT】**. **(Any key talk feature)**

2 When finished talking, press 【✆ⓞ】 or place the handset on the base unit.

Auto talk feature (Handset)

You can answer a call by lifting the handset off the base unit, without pressing 【✆】. This feature is set to off. To activate this feature, see page 59.

To turn the ringer off temporarily

When an external call comes in, press and hold 【▼】 for more than 1 second.

- This function will not work for internal calls or when the handset is on the base unit.

3.2.2 With the base unit

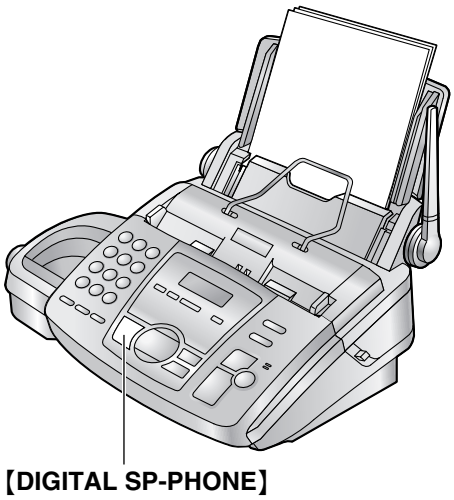

1 When "INCOMING CALL" is displayed, press **【DIGITAL SP-PHONE】** and talk into the microphone.

2 When finished talking, press **【DIGITAL SP-PHONE】**.

3.3 Handset locator

Using this feature, you can locate the handset if it has been misplaced.

- Keep the front cover page open for button locations.

1 Press **【LOCATOR/HOLD】**.
- The base unit will page the handset for about 1 minute.

2 To stop paging, press **【LOCATOR/HOLD】** on the base unit or **【↶】** / **【INT】** on the handset.

Note:

- This feature is not available while using **【DIGITAL SP-PHONE】**.

3.4 Storing names and telephone numbers into the phonebook

Up to 20 telephone numbers can be stored in the handset's phonebook for quick access.

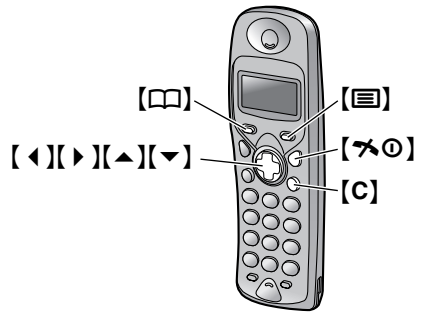

1 Press **【≡】**.

2 Press **【▶】**.

3 Enter the telephone number, up to 24 digits.
- The first 2 digits are the index number.

4 Press **【≡】**.

5 Enter the name, up to 9 characters (see the character table).

6 Press **【≡】**.
- To program other entries, repeat steps 3 to 6.

7 Press **【↶⏻】**.

To select characters with the dial keypad

Keys	Characters
【1】	# [ ] ✳ , – / 1
【2】	A B C 2
【3】	D E F 3
【4】	G H I 4
【5】	J K L 5
【6】	M N O 6
【7】	P Q R S 7
【8】	T U V 8
【9】	W X Y Z 9
【0】	(Space) 0

Note:
- To enter another character located on the same number key, press 【▶】 to move the cursor to the next space.
- If there is no space to store new entries, "MEMORY FULL" is displayed.
  Erase unnecessary entries (page 30).

To correct a mistake

1. Press 【◀】 or 【▶】 to move to the position to the right of where you want to correct the character/number.
2. Make the correction.
   - To clear a digit, press 【C】.

3.4.1 Editing a stored entry

1 Press 【📖】.

2 Press 【▲】 or 【▼】 repeatedly to display the desired entry.

3 Press 【▶】.

4 Press 【▲】 or 【▼】 repeatedly to select "EDIT".

5 Press 【▶】.
- If you do not need to edit the telephone number, skip to step 7.

6 Edit the telephone number. For further details, see the storing procedure on page 29.

7 Press 【☰】.
- If you do not need to edit the name, skip to step 9.

8 Edit the name (see the storing procedure on page 29 for instructions).

9 Press 【☰】.

3.4.2 Erasing a stored entry

1 Press 【📖】.

2 Press 【▲】 or 【▼】 repeatedly to display the desired entry.

3 Press 【▶】.

4 Press 【▲】 or 【▼】 repeatedly to display "CLEAR".

5 Press 【▶】.

6 Press 【▲】 or 【▼】 repeatedly to select "YES".
- To cancel erasing, select "NO".

7 Press 【▶】 or 【☰】.
- To erase other entries, repeat steps 2 to 7.

8 Press 【📞⏻】.

3.5 Making a phone call using the phonebook

Before using this feature, program the desired names and telephone numbers into the phonebook (page 29).
- Keep the front cover page open for button locations.

Important:
- **To prevent battery consumption, be sure to press 【📞⏻】 if a busy tone sounds when/after using the handset.**

1 Press 【📖】.

2 Press 【▲】 or 【▼】 repeatedly to display the desired entry.

3 Press 【📞】.
- The unit will start dialling automatically.

3.6 Hot key

3.6.1 Assigning an entry in the phonebook to a hot key

You can assign the handset dialling buttons 1 to 9 as hot keys, choosing 9 entries from the phonebook.
- Keep the front cover page open for button locations.

1 Press 【📖】.

2 Press 【▲】 or 【▼】 repeatedly to display the desired entry.

3 Press 【▶】.

4 Press 【▲】 or 【▼】 repeatedly to select "HOT KEY REG".

5 Press 【▶】.

6 Press 【▲】 or 【▼】 repeatedly to select a desired dialling button (1 to 9).
- If the dialling button is already assigned as a hot key, the displayed number will flash.

7 Press 【▶】.

8 Press 【▲】 or 【▼】 repeatedly to select "YES".

9 Press [▶] or [☰].
- To register other entries, repeat steps 2 to 9.

10 Press [✂⏻].

3.6.2 Erasing a hot key

1 Press and hold the desired hot key (1 to 9).

2 Press [▶].
- "CLEAR" will be displayed.

3 Press [▶].

4 Press [▲] or [▼] repeatedly to select "YES".

5 Press [▶] or [☰].

6 Press [✂⏻].

Note:
- The number erased from a hot key will not be deleted from the phonebook. To erase from the phonebook, see page 30.

3.6.3 Making a phone call using a hot key

Important:
- **To prevent battery consumption, be sure to press [✂⏻] if a busy tone sounds when/after using the handset.**

1 Press and hold the desired hot key (1 to 9).
- You can view other hot key registrations by pressing [▲] or [▼].

2 Press [📞].
- The unit will start dialling automatically.

3.7 Storing names and telephone numbers into the navigator directory

Up to 100 telephone numbers can be stored in the base unit's navigator directory for quick access.

- You can also send faxes using the navigator directory (page 36).

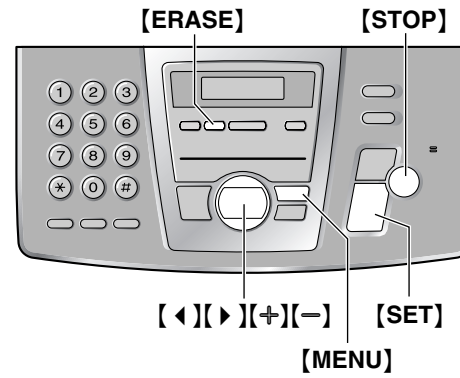

1 Press [MENU] repeatedly to display "DIRECTORY SET".

2 Press [✳].

3 Enter the name, up to 10 characters (see page 25 for instructions).

4 Press [SET].

5 Enter the telephone number, up to 30 digits.

6 Press [SET].
- To program other entries, repeat steps 3 to 6.

7 Press [MENU].

Helpful hints:
- You can confirm the stored entries in the fax number list (page 75).

Note:
- If "SPACE= 5 DIRS." is displayed, you can store only 5 more entries.
- A hyphen or a space entered in a telephone number counts as 2 digits.

To correct a mistake

Press [◀] or [▶] to move the cursor to the incorrect character/number, and then make the correction.

To delete a character/number

Press [◀] or [▶] to move the cursor to the character/number you want to delete, and press [STOP].

3.7.1 Editing a stored entry

1 Press [▶].

2 Press [+] or [−] repeatedly to display the desired entry.

3 Press **【MENU】**.

4 Press **【✳】**.
- If you do not need to edit the name, skip to step 6.

5 Edit the name (see the storing procedure on page 31 for instructions).

6 Press **【SET】**.
- If you do not need to edit the telephone number, skip to step 8.

7 Edit the telephone number. For further details, see the storing procedure on page 31.

8 Press **【SET】**.

3.7.2 Erasing a stored entry

1 Press **【▶】**.

2 Press **【+】** or **【—】** repeatedly to display the desired entry.

3 Press **【MENU】**.

4 Press **【#】**.
- To cancel erasing, press **【STOP】**.

5 Press **【SET】**.

Another method to erase a stored entry

1. Press **【▶】**.
2. Press **【+】** or **【—】** repeatedly to display the desired entry.
3. Press **【ERASE】**.
4. Press **【SET】**.

3.8 Making a phone call using the navigator directory

Before using this feature, program the desired names and telephone numbers into the navigator directory (page 31).
- Keep the front cover page open for button locations.

1 Press **【▶】**.

2 Press **【+】** or **【—】** repeatedly to display the desired entry.

3 Press **【DIGITAL SP-PHONE】** on the base unit.
- The unit will start dialling automatically.

To search for a name by initial
Example: "LISA"

1. Press **【▶】**.
2. Press **【+】** or **【—】** to initiate the navigator directory.
3. Press **【5】** repeatedly to display any name with the initial "L" (see the character table, page 25).
   - To search for symbols (not letters or numbers), press **【✳】**.
4. Press **【+】** repeatedly to display "LISA".
   - To stop the search, press **【STOP】**.
   - To dial the displayed number, press **【DIGITAL SP-PHONE】**.

3.9 Caller ID service (Handset only)

The handset is compatible with the Caller ID service offered by your local telephone company. To use this feature, you must subscribe to a Caller ID service.

3.9.1 How Caller ID is displayed

The calling party's telephone number will be displayed after the first ring. You then have the option of whether or not to answer the call depending on the caller.
The unit will automatically store the caller information and you can view it (page 33).
When new calls have been received, the display will show the number of new calls.

Note:
- When you receive a call from the same telephone number you stored with a name in the phonebook, the display will show the stored name.
- If the unit is connected to a PBX (Private Branch Exchange) system, you may not receive the caller information. Consult your PBX supplier.
- If the unit cannot receive caller information, the following will be displayed:
  "OUT OF AREA": The caller dialled from an area which does not provide Caller ID service.
  "PRIVATE": The caller requested not to send caller information.
- The area code will need to be stored with the 8-digit telephone number.

Visual Call Waiting (Call Waiting ID) Service

If you hear a call-waiting tone during a conversation with the handset, the handset display will show the second caller's information. You can answer the second call, keeping the first call on hold.

Note:

- Please contact your telephone company for details and availability of this service in your area.

3.10 Viewing and calling back using caller information (Handset only)

Up to 50 different caller's telephone numbers are stored from the most recent call to the oldest call. When the 51st call is received, the oldest caller information is cleared.

You can easily view caller information and call back.

Important:

- **Calling back will not be possible in the following cases:**
  - **The telephone number includes data other than numbers (i.e. ✳ or #).**
  - **The caller information does not include a telephone number.**
- **To prevent battery consumption, be sure to press 【✆⏻】 if a busy tone sounds when/after using the handset.**

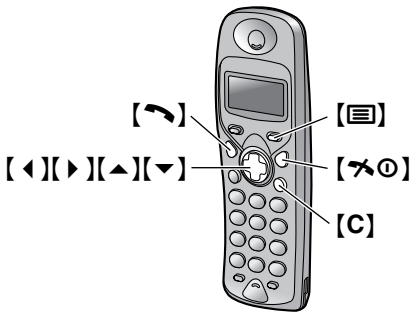

1 Lift the handset and press 【▼】.

2 Press 【▼】 to search from the most recent caller information.

Example:

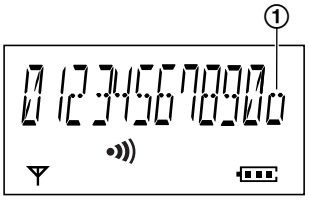

- (①) means this call has already been viewed or answered.

3 Press 【✆】 to call back the displayed party.

- The unit will start dialling automatically.

Note:

- Telstra and Optus do not currently send caller name information.

Display while viewing

When no calls have been received, the display will show "NO ITEM".

To stop viewing

Press 【✆⏻】 after step 2.

3.10.1 Editing a caller's telephone number before calling back

Important:

- **To prevent battery consumption, be sure to press 【✆⏻】 if a busy tone sounds when/after using the handset.**

1 Press 【▲】 or 【▼】 repeatedly to display the desired entry.

2 Press 【▶】.

3 Press 【▲】 or 【▼】 repeatedly to display "EDIT CALL NO".

4 Press 【▶】.

5 Press 【◀】 or 【▶】 to move to the position to the right of where you want to edit the number.

6 Edit the telephone number.

- To clear a digit, press 【C】.

7 Press 【✆】.

Note:

- The edited telephone number will not be saved in the caller information.

3.10.2 Erasing caller information

1 Press [▲] or [▼] until the desired entry is displayed.

2 Press [▶].

3 Press [▲] or [▼] repeatedly to select "CLEAR".
- If you want to erase all caller information, select "ALL CLEAR".

4 Press [▶].

5 Press [▲] or [▼] repeatedly to select "YES".

6 Press [▶] or [☰].

7 Press [⏻].

Note:
- Telstra and Optus do not currently send caller name information.

3.11 Storing caller information into the phonebook (Handset only)

- Keep the front cover page open for button locations.

Important:
- **This feature is not available in the following cases.**
  - **The telephone number includes data other than numbers (i.e. ✳ or #).**
  - **The caller information does not include a telephone number.**

1 Press [▲] or [▼] repeatedly to display the desired entry.

2 Press [▶].

3 Press [▲] or [▼] repeatedly to display "SAVE TEL NO".

4 Press [▶].

5 Press [☰].

6 Enter the name, up to 9 characters (see the character table on page 29).

7 Press [☰].

8 Press [⏻].

Note:
- Telstra and Optus do not currently send caller name information.

4.1 Sending a fax manually

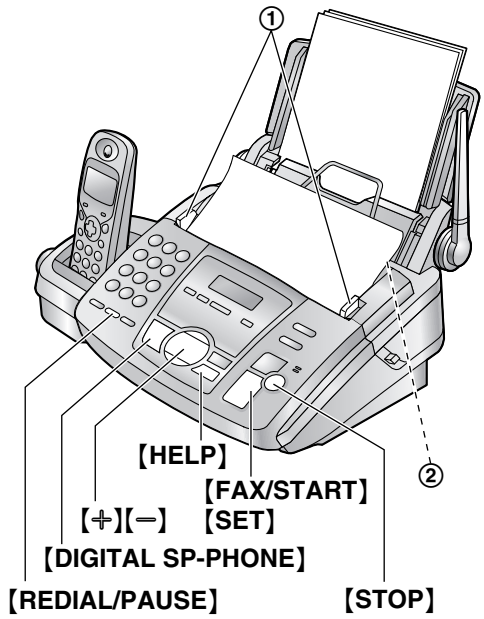

1 Adjust the width of the document guides (①) to the size of the document.

2 Insert the document (up to 10 pages) FACE DOWN (②) until a single beep is heard and the unit grasps the document.

3 If necessary, press 【+】 or 【−】 repeatedly to select the desired resolution.

4 Press 【**DIGITAL SP-PHONE**】.

5 Dial the fax number.

6 **When a fax tone is heard:**

Press 【**FAX/START**】.

When the other party answers your call:

Ask them to press their start button. When the fax tone is heard, press 【**FAX/START**】.

To select the resolution

Select the desired resolution according to the type of document.

– "STANDARD": For printed or typewritten originals with normal-sized characters.
– "FINE": For originals with small printing.
– "SUPER FINE": For originals with very small printing. This setting only works with other compatible fax machines.
– "PHOTO": For originals containing photographs, shaded drawings, etc.

- Using the "FINE", "SUPER FINE" and "PHOTO" settings will increase transmission time.
- If the resolution setting is changed during feeding, it will be effective from the next sheet.

To redial the last number

Press 【**REDIAL/PAUSE**】.

- If the line is busy, the unit will automatically redial the number up to 2 times.
- To cancel redialling, press 【**STOP**】.

To send more than 10 pages at a time

Insert the first 10 pages of the document. Add the other pages (up to 10 at a time) before the last page feeds into the unit.

Predialling a fax number

You can dial the fax number first before inserting the document. This is convenient if you need to refer to the document for the other party's fax number.

1. Enter the fax number.
2. Insert the document.
3. Press 【**FAX/START**】.

Sending from memory (Quick scan feature)

You can scan the document into memory before sending. To use this feature, activate feature #34 (page 53) beforehand.

1. Insert the document.
2. Enter the fax number.
3. Press 【**FAX/START**】.

- The document will be fed into the unit and scanned into memory. The unit will then transmit the data. If the document exceeds the memory capacity, sending will be cancelled and this feature will be turned off automatically. You must transmit the entire document manually.

To stop transmission

Press 【**STOP**】.

Sending a fax with the voice guide

You can send documents by following the voice guide.

1. Press 【**HELP**】 2 times.
2. Press 【**SET**】.
3. Follow steps 1 to 6 (page 35).

- After transmission, the voice guide will turn off automatically.

Sending report for confirmation

A sending report provides you with a printed record of transmission results. To use this feature, activate feature #04 (page 51). For an explanation of error messages in the result column, see page 65.

Journal report

A journal report provides you with a printed record of the 30 most recent faxes. To print manually, see page 75. To print automatically after every 30 new fax communications, activate feature #22 (page 52). For an explanation of error messages in the result column, see page 65.

4.2 Documents you can send

Minimum document size

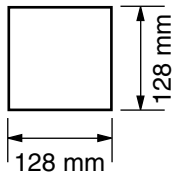

Maximum document size

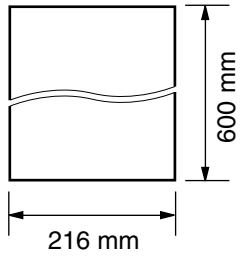

Effective scanning area

- Shaded area (①) will be scanned.

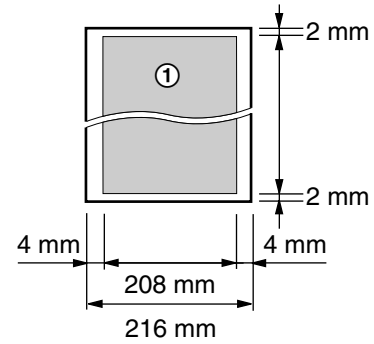

Document weight

- Single sheet: 45 g/m^2 to 90 g/m^2
- Multiple sheets: 60 g/m^2 to 80 g/m^2

Note:

- Remove clips, staples or other fasteners.
- Do not send the following types of documents: (Use copies for fax transmission.)
  - Chemically treated paper such as carbon or carbonless duplicating paper
  - Electrostatically charged paper
  - Badly curled, creased or torn paper
  - Paper with a coated surface
  - Paper with a faint image
  - Paper with printing on the opposite side that can be seen through the other side, such as newsprint.
- Check that ink, paste or correction fluid has dried completely.
- To transmit a document with a width of less than 210 mm, we recommend using a copy machine to copy the original document onto A4 or letter-sized paper, then transmitting the copied document.

4.3 Sending a fax using the navigator directory

Before using this feature, program the desired names and telephone numbers into the navigator directory (page 31).

- Keep the front cover page open for button locations.

1 Adjust the width of the document guides to the size of the document.

2 Insert the document (up to 10 pages) FACE DOWN until a single beep is heard and the unit grasps the document.

3 If necessary, press [+] or [−] repeatedly to select the desired resolution (page 35).

4 Press [▶].

5 Press [+] or [−] repeatedly to display the desired entry and press [FAX/START].

Fax auto redial

If the line is busy or if there is no answer, the unit will automatically redial the number up to 2 times.

- To cancel redialling, press [STOP].

If your unit does not send a fax

- Confirm the stored telephone number on the display and check that the number dialled is answered by the other party's machine.
- The connecting tone will be heard during dialling to tell you the status of the other party's machine (feature #76, page 55).

4.4 Broadcast transmission

By programming entries from the navigator directory (page 31) into the broadcast memory, you can send the same document to multiple parties (up to 20). Your programmed entries will remain in the broadcast memory, allowing frequent re-use. See page 37 for broadcast transmission instructions.

- Keep the front cover page open for button locations.

4.4.1 Programming entries into the broadcast memory

1 Press [MENU] repeatedly to display "DIRECTORY SET".

2 Press [#].
- The number in brackets indicates the number of registered entries.

3 Press [+] or [−] repeatedly to display the desired entry.

4 Press [SET].
- To program other entries, repeat steps 3 and 4 (up to 20 entries).

5 Press [SET].

Note:

- If you program the wrong entry, press [STOP] after step 4 to erase the entry.
- Confirm the stored entries by printing a broadcast programming list (page 75).

4.4.2 Adding a new entry into the broadcast memory

After initial programming, you can add new entries (up to a combined total of 20).

1 Press [▶].

2 Press [+] or [−] repeatedly to display "<BROADCAST>".

3 Press [MENU].

4 Press [✳].

5 Press [+] or [−] repeatedly to display the desired entry you want to add.

6 Press [SET].
- To add other entries, repeat steps 5 and 6 (up to 20 entries).

7 Press [STOP].

4.4.3 Erasing a stored entry from the broadcast memory

1 Press [▶].

2 Press [+] or [−] repeatedly to display "<BROADCAST>".

3 Press [MENU].

4 Press [#].

5 Press [+] or [−] repeatedly to display the desired entry you want to erase.
- To cancel erasing, press [STOP].

6 Press [SET].

7 Press [SET].
- To erase other entries, repeat steps 5 to 7.

8 Press [STOP].

4.4.4 Sending the same document to pre-programmed parties

1 Insert the document FACE DOWN.

2 If necessary, press [+] or [−] repeatedly to select the desired resolution (page 35).

3 Press [BROADCAST].
- The document will be fed into the unit and scanned into memory. The unit will then transmit the data to each entry, calling each number sequentially.

- After transmission, the stored document will be erased automatically, and the unit will automatically print a broadcast sending report.

Note:

- If you select "FINE", "SUPER FINE" or "PHOTO" resolution, the number of pages that the unit can transmit will decrease.
- If the document exceeds the memory capacity, sending will be cancelled.
- If one of the entries is busy or does not answer, it will be skipped and redialled later up to 2 times.

To send the same document to a one-time group of entries

You can also select a one-time group of entries to send the same document to. After transmission, this group will be deleted.

1. Insert the document.
2. Press 【▶】.
3. Press 【+】 or 【−】 repeatedly to display "<ONE TIME BROAD>".
4. Press 【SET】 to start programming the entries you want to transmit to.
5. Press 【+】 or 【−】 repeatedly to display the desired entry.
6. Press 【SET】.
   - To program other entries, repeat steps 5 and 6 (up to 20 entries).
7. Press 【SET】 to start transmission to the programmed entries.

To cancel broadcast transmission

1. Press 【STOP】 while the unit displays "BROADCASTING".
   - The display will show "SEND CANCELLED?".
2. Press 【SET】.

4.5 Receiving a fax manually

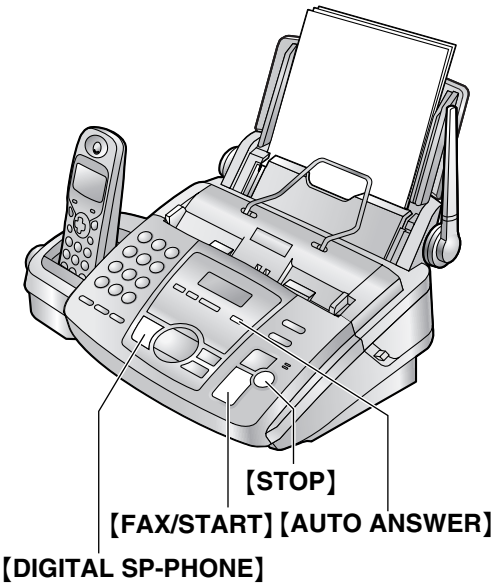

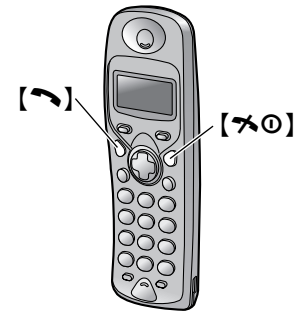

4.5.1 Activating TEL mode

Set the fax machine to TEL mode by pressing 【AUTO ANSWER】 repeatedly to display the following.

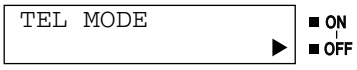

How to receive calls with the base unit

1 Press 【DIGITAL SP-PHONE】 to answer the call.

2 When:
- document reception is required,
- a fax calling tone (slow beep) is heard, or
- no sound is heard,

press 【FAX/START】.

```
CONNECTING.....
```

- The unit will start fax reception.

How to receive calls with the handset

Important:

- **To prevent battery consumption, be sure to press 【⚒⏻】 if a busy tone sounds when/after using the handset.**

1 Lift the handset and press 【↖】 to answer the call.

2 When:
– document reception is required,
– a fax calling tone (slow beep) is heard, or
– no sound is heard,

press 【✱】【#】【9】 (pre-selected fax activation code) **firmly**.
- A busy tone will be heard from the handset and the unit will start fax reception.
- You can also press 【FAX/START】 on the base unit.

3 When fax reception starts, press 【⚒⏻】.

Note:

- To receive fax documents using the handset, you must set the remote fax activation to on (feature #41, page 53) beforehand.

To stop receiving

Press 【STOP】.

Extension telephone

You can receive fax documents using an extension telephone.

Important:

- **Use a touch tone telephone as the extension telephone.**

1. When the extension telephone rings, lift the handset of the extension telephone.
2. When:
   – document reception is required,
   – a fax calling tone (slow beep) is heard, or
   – no sound is heard,

   press ✱#9 (pre-selected fax activation code) **firmly**.
3. Replace the handset.
   - The fax machine will start reception.

Note:

- To receive fax documents using the extension telephone, you must set the remote fax activation to on (feature #41, page 53) beforehand.

4.6 Receiving a fax automatically

4.6.1 Activating FAX ONLY mode

1 Set feature #77 to "FAX ONLY" (page 55) beforehand.

2 Press 【AUTO ANSWER】 repeatedly to display the following.

```
FAX ONLY MODE    ▶  ■ ON
                    ■ OFF
```

How to receive calls

When receiving calls, the unit will automatically answer all calls and only receive fax documents.

Note:

- The number of rings before a call is answered in FAX ONLY mode can be changed (feature #06 on page 52).

4.6.2 Activating TAD/FAX mode

1 Set feature #77 to "TAD/FAX" (page 55) beforehand.

2 Press 【AUTO ANSWER】 repeatedly to display the following.

```
TAD/FAX MODE     ▶  ■ ON
                    ■ OFF
```

- The unit will play the pre-recorded greeting message.

- The remaining time for recording incoming messages will be displayed.

Note:

- The maximum incoming message recording time can be changed (feature #10, page 52).
- While an incoming call is being recorded, you can monitor it through the speaker. If this feature is not required, set feature #67 to off (page 55).

How to receive calls

When receiving calls, the unit works as a fax and/or answering device.

- If the call is a phone call, the unit will record a voice message automatically.
- If a fax calling tone is detected, the unit will receive a fax automatically.

Receiving a voice message and fax document in one call

The caller can leave a voice message and send a fax document during the same call. Inform the caller of the following procedure beforehand.

1. The caller calls your unit.
   - The answering device will answer the call.
2. The caller can leave a message after the greeting message.
3. The caller presses ✳9.
   - The unit will activate the fax function.
4. The caller presses the start button to send a document.

Ring setting in TAD/FAX mode

You can choose from "2", "3", "4", "5", "6", "7", "8", "9", "TOLL SAVER" and "RINGER OFF". This setting can be changed by feature #06, page 52.

– "TOLL SAVER": When you call the unit from a remote location, the number of rings will tell you if there are any new voice messages. If the unit answers on the 2nd ring, there is at least one new recorded message. If the unit answers on the 4th ring, there are no new recorded messages. To save the toll charges for the call, hang up immediately when you hear the 3rd ring. The 3rd ring indicates that there are no new recorded messages.

– "RINGER OFF": The unit will answer without ringing.

4.7 Receive polling (retrieving a fax placed on another fax machine)

This feature allows you to retrieve a document from another compatible machine. Therefore you pay for the call.

Make sure that no documents are fed into your unit and that the other party's machine is ready for your call.

- Keep the front cover page open for button locations.

1 Press **【MENU】** repeatedly to display "POLLING".

2 Press **【SET】**.

3 Dial the fax number.

4 Press **【SET】**.
   - The unit will start reception.

5.1 Using with the ring detection feature

This feature is only for use if you subscribe to a Distinctive Ring pattern service from your telephone company. For more information on the availability of this service in your area, please contact your telephone company before setting this feature on your unit. This service is called "Fax Stream Duet".

The Distinctive Ring service gives you an additional phone number on a single telephone line, with a different ringing pattern.

When you wish to use the additional phone number as a facsimile telephone number, set the ring pattern detection feature to ON. When the unit detects a call matching the Distinctive Ring pattern, it will receive a fax automatically.

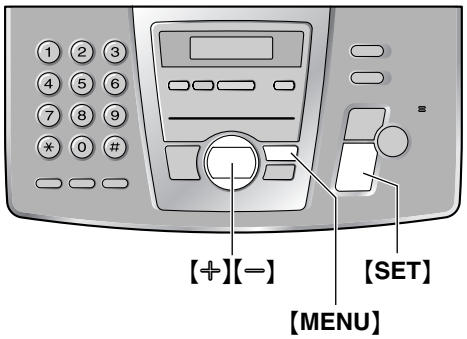

1 Press **【MENU】**.

2 Press **【#】**, then **【3】【1】**.

3 Press **【+】** or **【−】** to select "ON".
- If this feature is not required, select "OFF".

4 Press **【SET】**.

5 Press **【MENU】**.

How to receive calls

If the incoming call is for the fax number, the fax machine will ring with the assigned ring pattern and automatically start fax reception.

If the incoming call is for the phone number;

– the fax machine will keep on ringing in TEL mode.
– the fax machine will record voice message in TAD/FAX mode.
– fax communication will be attempted in FAX ONLY mode.

6.1 Making a copy

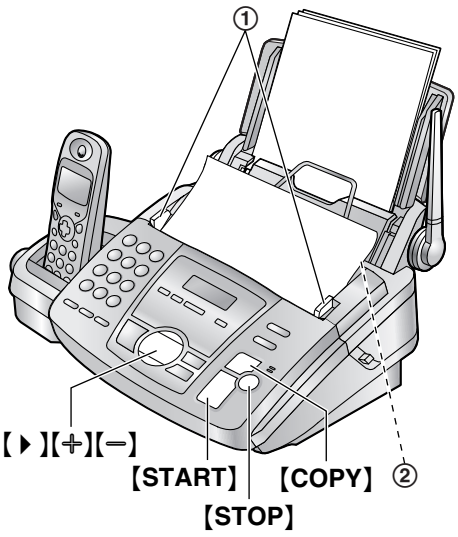

1 Adjust the width of the document guides (①) to the size of the document.

2 Insert the document (up to 10 pages) FACE DOWN (②) until a single beep is heard and the unit grasps the document.

3 If necessary, press 【＋】 or 【－】 repeatedly to select the desired resolution.

4 Press 【COPY】.
- If necessary, enter the number of copies (up to 50).

5 Press 【START】, or wait for 15 seconds.
- The unit will start copying.

Note:
- Any transmittable document can be copied (page 36).

To select the resolution

Select the desired resolution according to the type of document.
– "FINE": For printed or typewritten originals with small printing.
– "SUPER FINE": For originals with very small printing.
– "PHOTO": For originals containing photographs, shaded drawings, etc.

- If a resolution setting is not selected, "FINE" will be selected automatically.

Quick scan feature

This feature is helpful when you want to copy the document, then remove it for other uses. To use this feature, activate feature #34 (page 53) beforehand.
- The document will be fed into the unit and scanned into memory. The unit will then print the data.
  If the document exceeds the memory capacity, copying of the exceeded document will be cancelled and this feature will be turned off automatically.

To stop copying

Press 【STOP】.

6.1.1 More copying features

To enlarge a document

1. Press 【▶】 after step 4 on page 42.

2. Press 【＋】 repeatedly to select "150%" or "200%", then press 【START】.
- The unit will only enlarge the centre of the upper part of the document. To make an enlarged copy of the bottom of the document, turn the document around, and then make a copy.

Example: 150% enlarged copy

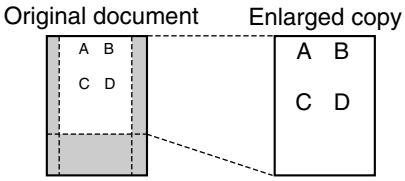

To reduce a document

1. Press 【▶】 after step 4 on page 42.

2. Press 【－】 repeatedly to select "92%", "86%" or "72%", then press 【START】.

Setting	Recording paper size	Original document size
100% (default)	Letter	Letter
	Legal	A4, Legal, Letter
	A4	A4, Letter
92%	A4, Letter	A4
86%	A4, Letter	A4
72%	Letter	Legal
	A4	Legal

A4 = 210 mm × 297 mm

Legal = 216 mm × 356 mm
Letter = 216 mm × 279 mm

Note:

- If the appropriate reduction rate is not selected, the document may be divided and the top of the second sheet will be deleted.
- If the image at the bottom of the document is not copied when you copy a document that is the same length as the recording paper, try 92% or 86%.

To collate multiple copies

The unit can collate multiple copies in the same order as the original document pages.

1. After step 4 on page 42, press **[▶]** 2 times. "COLLATE OFF" will be displayed.
2. Press **[+]** or **[−]** repeatedly to display "COLLATE ON".
3. Press **[START]**.

Example: Making 2 copies of a 4-page original document

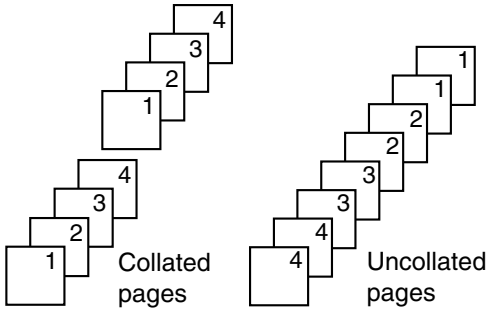

Note:

- The unit will store the documents into memory while collating the copies. If memory becomes full while storing, the unit will only print out the stored pages.
- After copying, the collating feature will turn off automatically.

7.1 Recording your greeting message

You can record your own greeting message for TAD/FAX mode, for a maximum of 16 (default) or 60 seconds in length. We recommend you record a message of less than 12 seconds to make it easier to receive faxes.

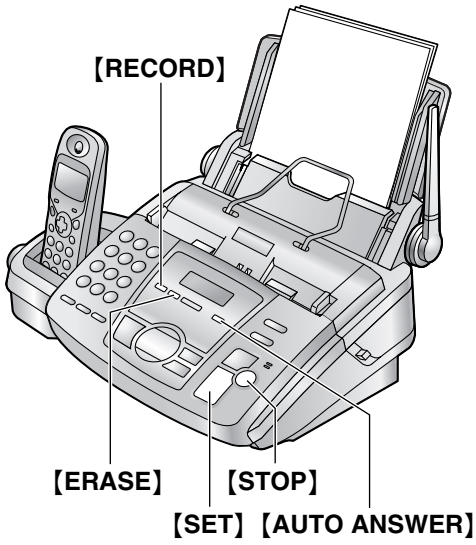

1 Set feature #77 to "TAD/FAX" (page 55) beforehand.

2 Press **【RECORD】** 2 times.

3 Press **【SET】**.
- A long beep will sound.

4 Speak clearly about 20 cm away from the microphone.
- The display will show the remaining recording time.

5 When finished recording, press **【STOP】**.
- The unit will repeat your message.

Note:
- You can choose 60 seconds for your TAD/FAX greeting message (feature #54, page 54).
  - If you change the maximum greeting message time to 60 seconds, we recommend that you tell the caller in your TAD/FAX greeting message to press ✳9 before starting fax transmission.
  - If you change the maximum greeting message time from 60 seconds to 16 seconds, your greeting message will be deleted. When a call is received, the pre-recorded greeting message will be played.

Checking the greeting message

1. Set feature #77 to "TAD/FAX" (page 55) beforehand.
2. Press **【AUTO ANSWER】** repeatedly to display the following.

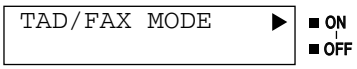

- The unit will play the greeting message.

7.1.1 Erasing your recorded greeting message

1 Set feature #77 to "TAD/FAX" (page 55) beforehand.

2 Press **【ERASE】** 2 times.

3 Press **【SET】**.
- To cancel erasing, press **【STOP】**.

4 Press **【SET】**.

Note:
- If you erase your TAD/FAX greeting message, the pre-recorded greeting message will be played when a call is received.

7.2 Leaving a message for others or yourself

To leave a private message for yourself or someone else, you can record a voice memo. This memo can be played back later, either directly or remotely.
- Keep the front cover page open for button locations.

1 Press **【RECORD】**.

2 Press **【SET】**.
- A long beep will sound.

3 Speak clearly about 20 cm away from the microphone.

4 When finished recording, press **【STOP】**.

7.3 Listening to recorded messages

When the unit has recorded new voice messages:

– The PLAY MESSAGES indicator will flash.
– The display will show the total number of recorded messages.

Example:

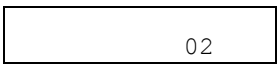

– The unit will beep slowly if the message alert feature is activated (feature #42, page 53).

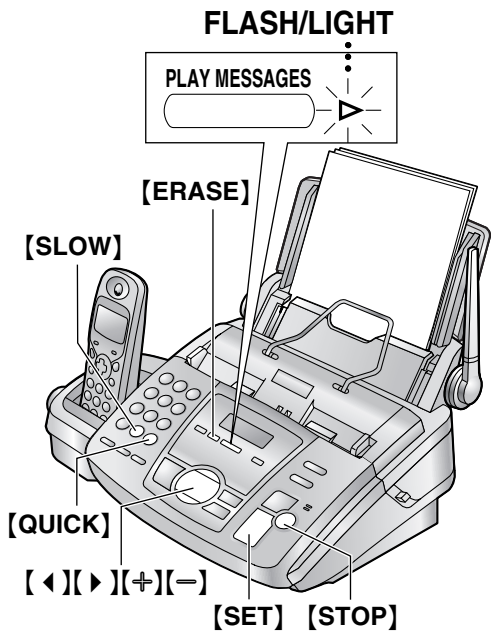

Press **【PLAY MESSAGES】**.

- Only the new recorded messages will be played.
- Adjust the speaker volume using **【＋】** or **【－】**.
- After playing back all of the new messages, the PLAY MESSAGES indicator will stop flashing but will remain lit up. If you press **【PLAY MESSAGES】** at this time, all the recorded messages will be played.

To repeat a message

Press **【◀】** while listening to the message.

- If you press **【◀】** within 5 seconds of the beginning of the message, the previous message will be played.
- To play back a specific message, press **【◀】** or **【▶】** and search for the message you want to listen to.

To skip a message

Press **【▶】** to play the next message.

To stop playback temporarily

Press **【STOP】**.

- If you press **【PLAY MESSAGES】** within 1 minute, the unit will resume playing the rest of the messages.

Voice time/day stamp

During playback, a synthesised voice will announce the day of the week and time that each message was recorded.

To change the playback speed

Press **【QUICK】** to play messages at one and a half times the original speed. Press **【SLOW】** to play messages at half the original speed.

- To return to the original speed, press either **【QUICK】** or **【SLOW】** again during quick or slow playback.

7.3.1 Erasing recorded messages

To erase a specific message

Press **【ERASE】** while listening to the message you want to erase.

To erase all the messages

1. Press **【ERASE】**.
2. Press **【SET】**.
3. Press **【SET】** again.

- Messages recorded in the voice mailbox will not be erased.

7.4 Operating from a remote location

You can call your unit from a remote location and access the answering device.

Important:

- **Program the remote operation ID beforehand (feature #11, page 52).**
- **Set the unit to TAD/FAX mode before going out (page 39).**
- **Use a touch tone telephone for remote operations.**

Helpful hints:

- When you press a key, press firmly.
- **Please make a copy of the following table, and carry it with you when you go out.**

Answering device remote operation			
1. Call your unit. **2.** Enter the remote operation ID during the greeting message. **3.** Enter the remote command key within 10 seconds. • To record a message in a mailbox, call your unit, press 【✳】 and the mailbox no. (1 or 2), then leave a message. • To retrieve messages from a mailbox, call your unit, press 【✳】 and the mailbox no. (1 or 2), enter the mailbox password, then press the remote command key.		【4】	New message playback
		【5】	All message playback
		【6】	Room monitor
		【7】	Re-records the greeting message
		【9】	Stops re-recording of the greeting message
		【✳】【4】	Erases a specific message
		【✳】【5】	Erases all messages
		【8】【0】	Changes to TEL mode
Key	**Remote command**	【8】【1】	Turns on message transfer
【0】	Skips the greeting message	【8】【2】	Turns off message transfer
【1】	Repeats a message	【8】【3】	Turns on pager call
【2】	Skips a message	【8】【4】	Turns off pager call

7.4.1 Listening to recorded messages

1 Call your unit.

2 Press the remote operation ID during the TAD/FAX greeting message.

3 Start remote operations.

When there are new recorded messages
The voice guide will tell you the number of new messages and they will be played automatically.

When there are no new messages
Voice guide:
"No new messages."

Wait for 4 seconds or press 【5】 to listen to all the messages.

When voice memory is full
Voice guide:
"Sorry, no more memory. Please erase unnecessary messages."
Erase unnecessary messages.

7.4.2 Remote operations using the remote command key

【1】: repeats a message. If you press this key within 5 seconds of the beginning of a message, the previous message will be played.

【2】: skips a message.

【4】: plays back only the new messages.

【5】: plays back all the messages.

Note:

- If you do not enter a remote command key within 10 seconds after the last operation, the unit will ask you to leave a marker message (page 47).

7.4.3 Other remote operations

Erasing a specific message

Press 【✳】【4】 while listening to the message you want to erase.

Voice guide:

"The message has been erased."

- A long beep will sound. The unit will then play back the next message.

Erasing all the messages

Press 【✳】【5】 to erase all the messages.

Voice guide:

"All messages have been erased."

- A long beep will sound.

Monitoring the room

Press 【6】 to monitor the sound for about 30 seconds in the room where the unit is installed.

- After 30 seconds, a beep sounds. To continue monitoring, press 【6】 again within 10 seconds.

Recording a marker message

After playing back the messages, you can leave an additional message.

1. Wait for the voice guide.
   Voice guide:
   "All messages have been played."
2. Wait about 10 seconds.
   Voice guide:
   "Please leave your name and message after the beep."
3. Leave a message after the beep.

Re-recording your greeting message

You can change the TAD/FAX greeting message.

1. Press 【7】 to start recording.
   - A long beep will sound.
2. Speak clearly for up to 16 seconds.
   - If you pause for over 2 seconds, 6 beeps will sound and the recording will stop. Repeat from step 1 within 10 seconds.
3. When finished recording, press 【9】.
   - The new greeting message will be played.

Skipping the greeting message

Press 【0】 during the greeting message playback.

- The unit will skip the rest of the greeting message.

Turning message transfer on or off

You must program a transfer telephone number beforehand (feature #60, page 54).

Press 【8】【1】 to turn on message transfer.

Voice guide example:

"Message transfer is set. Transfer phone number is 123..."

Press 【8】【2】 to turn off message transfer.

Voice guide example:

"Message transfer is off."

Turning pager call on or off

You must program a pager number beforehand (feature #70, page 50).

Press 【8】【3】 to turn on pager call.

Voice guide example:

"Pager call is set. Pager number is 098765432."

Press 【8】【4】 to turn off pager call.

Voice guide example:

"Pager call is off."

Changing the receive mode

Press 【8】【0】 to change the receive mode from TAD/FAX to TEL.

- You cannot return to TAD/FAX mode in the same call. To return to TAD/FAX mode, see the following.

Setting to TAD/FAX or FAX ONLY mode from TEL mode

1. Call your unit and wait for 10 rings.
   - You will hear a beep signal.
2. Enter the remote operation ID (feature #11, page 52) **within 8 seconds**.
   - A beep will sound.
3. **To switch to FAX ONLY mode:**

   Press 【✳】 within 3 seconds.

   To switch to TAD/FAX mode:

   Wait for 3 seconds, then the greeting message will be played.
4. Hang up the handset.

7.5 Allowing callers to leave private messages

This unit has two private mailboxes. A caller can leave a private message in a specific mailbox. Only the person who knows the password can retrieve a message from a mailbox. This feature is useful when you share this unit with other people.

7.5.1 To use a mailbox

1 Record your TAD/FAX greeting message (page 44).

Suggested message: *"This is (your name). We are unable to answer right now. To send a fax, start transmission. To leave a message, speak after the beep. To leave a private message, press ✳ and the desired mailbox number 1 or 2. Thank you."*

2 Record your mailbox greeting message if necessary (page 48).

3 Change the mailbox password if necessary.
- For mailbox 1 password, see feature #51, (page 54).
- For mailbox 2 password, see feature #52, (page 54).

4 Set the unit to TAD/FAX mode (page 39).

7.5.2 Leaving messages in a mailbox

1 Call your unit from a remote touch tone telephone.
- The TAD/FAX greeting message will be played.

2 Press **【✳】** and the desired mailbox number (**【1】** or **【2】**).
- A mailbox greeting message will be played.

3 After the beep, leave a message.

Note:
- If the caller does not enter a mailbox number in step 2, the message will be recorded in the common memory.

7.6 Recording your mailbox greeting messages

The recording time of each greeting is limited to 16 seconds for each mailbox.

Suggested message: *"This is (personal name). Please leave your name and message after the beep."*

- Keep the front cover page open for button locations.

1 Press **【MENU】**.

2 **For mailbox 1:**
Press **【#】**, then **【5】【5】**.

For mailbox 2:
Press **【#】**, then **【5】【6】**.

3 Press **【+】** or **【−】** repeatedly to select "RECORD".

4 Press **【SET】**.

5 Speak clearly about 20 cm away from the microphone.
- The display will show the remaining recording time.

6 When finished recording, press **【STOP】**.
- The unit will repeat your message.

7 Press **【MENU】**.

To check the mailbox greeting message

1. **For mailbox 1:**
Press **【MENU】**, then **【#】【5】【5】**.
For mailbox 2:
Press **【MENU】**, then **【#】【5】【6】**.
2. Press **【+】** or **【−】** repeatedly to select "CHECK".
3. Press **【SET】**.
   - The unit will play the message.
4. Press **【MENU】**.

To erase your mailbox greeting message

1. **For mailbox 1:**
Press **【MENU】**, then **【#】【5】【5】**.
For mailbox 2:
Press **【MENU】**, then **【#】【5】【6】**.
2. Press **【+】** or **【−】** repeatedly to select "ERASE".
3. Press **【SET】**.
   - Your mailbox greeting message will be erased.
4. Press **【MENU】**.

7.7 Listening to recorded mailbox messages

- Keep the front cover page open for button locations.

1 Press **【▶】** 2 times.

2 Press **【+】** or **【−】** repeatedly to display the desired mailbox number.

3 Press **【PLAY MESSAGES】**.
If you have programmed your mailbox password, enter it.
- Only the new recorded messages will be played.
- If there are no new messages, the unit will play back all the recorded messages.

Note:
- See the following topics on page 45 for details on features that can be used during playback.
  - To repeat a message
  - To skip a message
  - To stop playback
  - To change the playback speed
  - To erase a specific message

To record a memo message into a mailbox

1. Press **【▶】** 2 times.
2. Press **【+】** or **【−】** repeatedly to display the desired mailbox number.
3. Press **【RECORD】**.
   - A long beep will sound.
4. Speak clearly about 20 cm away from the microphone.
5. When finished recording, press **【STOP】**.

To erase all messages in a mailbox

1. Press **【▶】** 2 times.
2. Press **【+】** or **【−】** repeatedly to display the desired mailbox number.
3. Press **【ERASE】**.
4. Press **【SET】**.

7.8 Listening to recorded mailbox messages from a remote location

1 Call your unit from a remote touch tone telephone.

2 Press **【✳】** and the desired mailbox number (**【1】** or **【2】**) during TAD/FAX greeting playback.
- If you have recorded your mailbox greeting message, it will be played.

3 Enter the mailbox password (default setting "555").

Note:
- For details on remote operation, see page 46 to page 47. Remote commands **【8】【1】**, **【8】【2】**, **【8】【3】**, and **【8】【4】** cannot be used.

To listen to messages in another memory after playback

Press **【✳】** and **【0】** (for the common memory), then enter the remote operation ID.

OR

Press **【✳】** and the desired mailbox number (**【1】** or **【2】**), then enter the mailbox password.

7.9 Transferring recorded messages to another telephone

This feature allows your unit to call a designated telephone number each time an incoming voice message is recorded. You can retrieve the transferred message via remote operation.
- Keep the front cover page open for button locations.

Important:
- **To use this feature, program the transfer telephone number first (feature #60, page 54) and set the unit to TAD/FAX mode.**

7.9.1 How this feature works

1 An incoming voice message is recorded in your unit.

2 Your unit calls the transfer telephone number.

3 You answer the call with the transfer telephone.

4 Your unit will play the pre-recorded transfer greeting message.
- You can record a transfer greeting message.

5 You enter the remote operation ID, and retrieve the message using remote operation (page 46 to page 47).

7.9.2 Recording your transfer greeting message

The recording time is limited to 16 seconds.

Suggested message: *"This is a transferred message from (your name, business and/or telephone number). Please enter your remote ID for remote operation."*

1 Press **【MENU】**.

2 Press **【#】**, then **【6】【1】**.

3 Press **【+】** or **【−】** repeatedly to select "RECORD".

4 Press **【SET】**.

5 Speak clearly about 20 cm away from the microphone.
- The display will show the remaining recording time.

6 When finished recording, press **【STOP】**.
- The unit will repeat your message.

7 Press **【MENU】**.

To check the transfer greeting message

1. Press **【MENU】**, **【#】【6】【1】**.
2. Press **【+】** or **【−】** repeatedly to select "CHECK".
3. Press **【SET】**.
   - The unit will play the message.
4. Press **【MENU】**.

To erase your transfer greeting message

1. Press **【MENU】**, **【#】【6】【1】**.
2. Press **【+】** or **【−】** repeatedly to select "ERASE".
3. Press **【SET】**.
4. Press **【MENU】**.

Note:
- When transferring a call, the pre-recorded transfer greeting message will be played.

Pager call

This feature allows your unit to call your pager when your unit receives a fax document or an incoming voice message.

1. Press **【MENU】**.
2. Press **【#】**, then **【7】【0】**.
3. Press **【+】** or **【−】** repeatedly to select "ON".
4. Press **【SET】**.
5. Enter your pager number and/or pauses (up to 46 digits).
   Example:
   1 202 555 1234PP12345678PP5555#
   - **1 202 555 1234:** Your pager number
   - **PP:** Pauses
   - **12345678:** Your pager access code, if required.
   - **5555 (example):** Message you want displayed on your pager.
6. Press **【SET】**.
   - The unit will dial the stored number.
7. Check that your pager received the pager test call.
8. Press **【DIGITAL SP-PHONE】**.

When your pager receives a pager call

Your pager will display the message you entered in step 5 (for example:5555).

8.1 Base unit programming

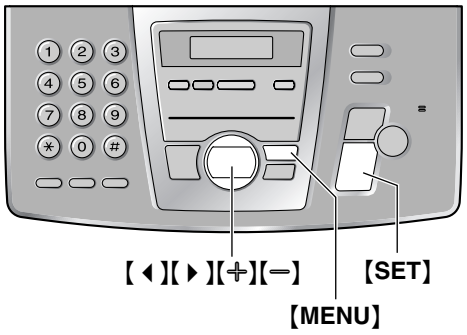

8.1.1 Programming basic features

1 Press **【MENU】**.

2 Select the feature you wish to program. Press **【◀】** or **【▶】** repeatedly to display the desired feature.
- The current setting of the feature will be displayed.

3 Press **【+】** or **【−】** repeatedly to display the desired setting.
- This step may be slightly different depending on the feature.

4 Press **【SET】**.
- The setting you selected is set, and the next feature will be displayed.

5 To exit programming, press **【MENU】**.

8.1.2 Programming advanced features

1 Press **【MENU】**.

2 Press **【◀】** or **【▶】** repeatedly to display "ADVANCED MODE".

3 Press **【SET】**.

4 Select the feature you wish to program. Press **【◀】** or **【▶】** repeatedly to display the desired feature.
- The current setting of the feature will be displayed.

5 Press **【+】** or **【−】** repeatedly to display the desired setting.
- This step may be slightly different depending on the feature.

6 Press **【SET】**.
- The setting you selected is set, and the next feature will be displayed.

7 To exit programming, press **【MENU】**.

Programming by entering the program code number directly

You can select a feature by directly entering the program code (# and a 2-digit number) instead of using **【◀】** or **【▶】**.

1. Press **【MENU】**.
2. Press **【#】** and the 2-digit code number (page 51 to page 55).
3. Press **【+】** or **【−】** repeatedly to display the desired setting.
4. Press **【SET】**.
5. To exit programming, press **【MENU】**.

To cancel programming

Press **【MENU】** to exit the program.

8.2 Basic features

Code #01: Setting the date and time

```
SET DATE & TIME
       PRESS SET
```

See page 23 for details.

Code #02: Setting your logo

```
YOUR LOGO
       PRESS SET
```

See page 24 for details.

Code #03: Setting your fax number

```
YOUR FAX NO.
       PRESS SET
```

See page 26 for details.

Code #04: Printing a sending report

```
SENDING REPORT
=ERROR        [±]
```

To print a sending report for fax transmission results (page 36).
"ERROR" (default): A sending report will be printed only when fax transmission fails.
"ON": A sending report will be printed out after every transmission.
"OFF": Sending reports will not be printed out.

Code #06: Changing the ring setting in TAD/FAX mode

```
TAD RING COUNT
RINGS=2       [±]
```

To change the number of rings before the unit answers a call in TAD/FAX mode. You can select "2" (default), "3", "4", "5", "6", "7", "8", "9", "TOLL SAVER" or "RINGER OFF". See page 40 for details.

- Set feature #77 to "TAD/FAX" (page 55) beforehand.

Code #06: Changing the ring setting in FAX ONLY mode

```
FAX RING COUNT
RINGS=2       [±]
```

To change the number of rings before the unit answers a call in FAX ONLY mode.
You can select "2" (default), "3", "4", "5", "6", "7", "8" or "9".

- Set feature #77 to "FAX ONLY" (page 55) beforehand.

Code #10: Changing the maximum incoming message recording time

```
RECORDING TIME
=VOX           [±]
```

"VOX" (default): Unlimited.
"1-9 MIN": 1 minute to 9 minutes.

Code #11: Setting the remote operation ID

```
REMOTE TAD ID
=ON            [±]
```

1. Press **【MENU】**.
2. Press **【◀】** or **【▶】** repeatedly to select this feature.
3. Press **【+】** or **【−】** repeatedly to select "ON".
4. Press **【SET】**.
5. Enter any 3-digit number except a number using 0 or 7.
   - The default ID is "222".
6. Press **【SET】**.
7. Press **【MENU】**.

Code #17: Setting the ringer pattern

```
RINGER PATTERN
=A             [±]
```

You can select "A" (default), "B" or "C".

Code #19: Setting the clock entry/display

```
CLOCK DISPLAY
=12H           [±]
```

This feature changes the clock format for when the line is indicated in printed reports and lists, or displayed on the base unit.
"12H" (default): 12 hour clock
"24H": 24 hour clock

8.3 Advanced features

Code #22: Setting the journal report to print automatically

```
AUTO JOURNAL
=ON            [±]
```

"ON" (default): The unit will print a journal report automatically after every 30 new fax communications (page 36).
"OFF": The unit will not print a journal report, but will keep a record of the last 30 fax communications.

Code #23: Sending documents overseas

```
OVERSEAS MODE
=OFF           [±]
```

If you have difficulty sending an overseas fax, activate this feature before starting transmission.

- This feature is not available for broadcast transmission.
- The calling charge may be higher as the transmission speed is slowed down.

"ON": After transmission, this feature will turn off automatically.
"OFF" (default): Deactivates this feature.

Code #25: Sending a fax at a specific time

```
DELAYED SEND
=OFF           [±]
```

This feature allows you to take advantage of low-cost calling hours offered by your telephone company. This feature can be set up to 24 hours in advance of the desired time.
To send a document:

1. Insert the document.
2. Press **【MENU】**.
3. Press **【#】** then **【2】【5】**.
4. Press **【+】** or **【−】** repeatedly to select "ON".
5. Press **【SET】**.
6. Enter the fax number.
7. Press **【SET】**.

8. Enter the transmission start time.
   - Press 【✳】 repeatedly to select "AM" or "PM".
   - If you select the clock display to "24H" (feature #19, page 52), the time is set using 24 hour clock entry.
9. Press 【SET】.
10. Press 【MENU】.

Note:
- To cancel after programming, press 【STOP】 then 【SET】.

Code #31: Activating the Distinctive Ring feature

```
DISTINCTIVE RING
=OFF          [±]
```

See page 41 for details.

Code #34: Setting the quick scan

```
QUICK SCAN
=OFF          [±]
```

This feature is helpful when you want to remove the document for other uses, because the unit will release the document before sending or copying.
- If the document exceeds the memory capacity, sending of the whole document or copying of the exceeded document will be cancelled and this feature will be turned off automatically.

"ON": The unit will scan the document and store it into memory first, then the unit will start sending or copying.
"OFF" (default): Deactivates this feature.

Code #36: Receiving oversized documents

```
RCV REDUCTION
=92%          [±]
```

If the size of the document sent by the other party is as large as, or larger than the recording paper, the unit can reduce the document and print it. Select the desired reduction rate.

Setting	Recording paper size	Original document size
100%	Legal	Letter, A4
	A4	Letter
92% (default)	Letter	Letter
	Legal	Legal
	A4	A4
86%	Letter	A4
	A4	A4
72%	Letter	Legal
	A4	Legal

Code #39: Changing the display contrast

```
LCD CONTRAST
=NORMAL       [±]
```

"NORMAL" (default): For normal contrast.
"DARKER": Used when the display contrast is too light.

Code #41: Changing the fax activation code

```
FAX ACTIVATION
=ON           [±]
```

If you use an extension telephone and wish to use it to receive a fax, activate this feature and program the activation code.

1. Press 【MENU】.
2. Press 【#】, then 【4】【1】.
3. Press 【+】 or 【−】 repeatedly to select "ON".
4. Press 【SET】.
5. Enter your code from 2 to 4 digits, using 0–9, 【✳】 and 【#】.
   - The default code is "**✳#9**".
6. Press 【SET】.
7. Press 【MENU】.

Note:
- Do not enter "0000".
- Do not program the same code number as a restricted number of the call restriction in the handset programming (page 60).

Code #42: Setting the message alert

```
MESSAGE ALERT
=OFF          [±]
```

To alert you when a new voice message is recorded. The unit beeps slowly until you listen to the recorded messages.
"ON": You will be alerted to new messages by a beeping sound.
"OFF" (default): Deactivates this feature.

Code #43: Setting the recording time alert

```
REC. TIME ALERT
=OFF          [±]
```

To alert you with beeps when there is less than 60 seconds of remaining recording time. The slow beeps will continue until you erase the recorded messages (page 45, 49).
"ON": You will be alerted that you have reached the recording time limit by a beeping sound.
"OFF" (default): Deactivates this feature.

Code #44: Setting the memory reception alert

```
RECEIVE ALERT
=ON          [±]
```

To alert you with a beeping sound when a received fax document is stored into memory due to some existing problem.
The slow beeps will continue until you clear the printing problem and make sure the unit is supplied with enough paper to print the stored document.
"ON" (default): You will be alerted to a reception problem by a beeping sound.
"OFF": Deactivates this feature.

Code #46: Setting friendly reception

```
FRIENDLY RCV
=ON          [±]
```

To receive a fax automatically when you answer a call using the base unit and hear a fax calling tone (slow beep).
"ON" (default): You do not have to press **【FAX/START】** for fax reception.
"OFF": You have to press **【FAX/START】** for fax reception.

Code #47: Setting the fax voice guidance

```
FAX GUIDANCE
=ON          [±]
```

If you wish to hear voice guidance, activate this feature.
"ON" (default): You will hear voice guidance.
"OFF": Deactivates this feature.
"ERROR": To hear voice guidance only when fax transmission/reception fails.

Code #51: Setting the mailbox 1 password

```
BOX1 PASSWORD
ID=
```

To prevent other users from retrieving your messages, program a password for mailbox 1.

1. Press **【MENU】**.
2. Press **【#】**, then **【5】【1】**.
3. Enter a 3-digit number except a number using digits 0 or 7.
   - The default ID is "555".
4. Press **【SET】**.
5. Press **【MENU】**.

Code #52: Setting the mailbox 2 password

```
BOX2 PASSWORD
ID=
```

To prevent other users from retrieving your messages, program a password for mailbox 2.

1. Press **【MENU】**.
2. Press **【#】**, then **【5】【2】**.
3. Enter a 3-digit number except a number using digits 0 or 7.
   - The default ID is "555".
4. Press **【SET】**.
5. Press **【MENU】**.

Code #54: Changing the recording time for your TAD/FAX greeting message

```
GREETING TIME
=16s          [±]
```

"16s" (default): Maximum recording time is 16 seconds.
"60s": Maximum recording time is 60 seconds.
See page 44 for details.

Code #55: Greeting message for mailbox 1

```
BOX1 GREETING
CHECK         [±]
```

See page 48 for details.

Code #56: Greeting message for mailbox 2

```
BOX2 GREETING
CHECK         [±]
```

See page 48 for details.

Code #58: Setting the original mode

```
ORIGINAL
=NORMAL       [±]
```

To send or copy a document with faint or dark writing, set this feature before starting transmission or copying.
"NORMAL" (default): Used for normal writing.
"LIGHT": Used for faint writing.
"DARKER": Used for dark writing.

Code #60: Setting the message transfer

```
MESSAGE TRANSFER
=OFF          [±]
```

To transfer recorded incoming messages to another telephone (page 49), activate this feature and program the transfer telephone number.

1. Press **【MENU】**.
2. Press **【#】**, then **【6】【0】**.
3. Press **【+】** or **【−】** repeatedly to select "ON".
4. Press **【SET】**.
5. Enter the transfer telephone number.
6. Press **【SET】**.
7. Press **【MENU】**.

Code #61: Checking, recording or erasing the transfer greeting message

```
TRNS-GREETING
CHECK          [±]
```

See page 49 for details.

Code #67: Setting the incoming message monitor

```
ICM MONITOR
=ON            [±]
```

To hear an incoming message (ICM) from the speaker when the answering device is recording the message.
"ON" (default): You can monitor the incoming message.
"OFF": Deactivates this feature.

Code #68: Setting the Error Correction Mode (ECM)

```
ECM SELECTION
=ON            [±]
```

This feature is available when the transmitting/receiving fax machines are ECM compatible.
"ON" (default): To send a fax even if there is static interference on the telephone line.
"OFF": Deactivates this feature.

- You cannot change the setting when received documents are in memory.

Code #70: Calling your pager

```
PAGER CALL
=OFF           [±]
```

See page 50 for details.

Code #76: Setting the connecting tone

```
CONNECTING TONE
=ON            [±]
```

If you often have trouble when sending faxes, this feature allows you to hear connecting tones; fax tone, ring back tone and busy tone. You can use these tones to confirm the status of the other party's machine.

- If the ring back tone continues, the other party's machine may not be a facsimile or may have run out of paper. Check with the other party.
- The connecting tone volume cannot be adjusted.

"ON" (default): You will hear connecting tones.
"OFF": Deactivates this feature.

Code #77: Changing the receiving mode in the auto answer setting

```
AUTO ANSWER
=TAD/FAX       [±]
```

"TAD/FAX" (default): Telephone Answering Device/Facsimile mode (page 39)
"FAX ONLY": Facsimile only mode (page 39)

Code #80: Resetting advanced features to their default settings

```
SET DEFAULT
RESET=NO       [±]
```

To reset the advanced features:

1. Press **【MENU】**.
2. Press **【#】**, then **【8】【0】**.
3. Press **【+】** or **【−】** repeatedly to select "YES".
4. Press **【SET】**.
5. Press **【SET】** again.
6. Press **【MENU】**.
   - ECM selection (feature #68, page 55) will not be reset.

8.4 Handset programming

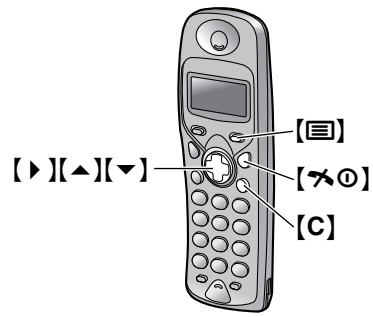

To exit programming, press **【✆⏻】** any time.

Time alarm settings

```
TIME ALARM
```

Set the time and date on the handset beforehand (page 23).

Setting the time of alarm

1. Press [(≡)].
2. Press [▲] or [▼] repeatedly to display "SETTING HS".
3. Press [▶].
4. Press [▲] or [▼] repeatedly to display "TIME ALARM".
5. Press [▶].
6. Press [▲] or [▼] repeatedly to display "SET TIME".
7. Press [▶].
8. Enter the desired hour/minute by selecting 2 digits for each (24 hour clock entry).
   - To clear, press [C].
9. Press [▶].
10. Press [▲] or [▼] repeatedly to select the desired setting.
    "ONCE": Alarm will ring only once.
    "REPEAT DAILY": Alarm will ring at the set time everyday.
    "OFF" (default): Deactivates this feature.
11. Press [▶] or [(≡)].
12. Press [✂⏻].

Note:

- Time alarm will sound for 3 minutes.
- To stop the alarm, press any dialling buttons.
- When in talk or intercom mode, the alarm will not sound until the call is ended.

Changing the time alarm frequency

1. Press [(≡)].
2. Press [▲] or [▼] repeatedly to display "SETTING HS".
3. Press [▶].
4. Press [▲] or [▼] repeatedly to display "TIME ALARM".
5. Press [▶].
6. Press [▲] or [▼] repeatedly to display "SET ALARM".
7. Press [▶].
8. Press [▲] or [▼] to select "ONCE", "REPEAT DAILY" or "OFF".
9. Press [▶] or [(≡)].
10. Press [✂⏻].

Ringer option settings

You can select the following ringer settings.

Ringer volume: See page 21.

Ringer patterns for external calls / internal calls / paging / alarm: There are 20 patterns available for each ringer. To change the ringer patterns, proceed as follows.

1. Press [(≡)].
2. Press [▲] or [▼] repeatedly to display "SETTING HS".
3. Press [▶].
4. Press [▲] or [▼] repeatedly to display "RINGER OPT".
5. Press [▶].
6. Press [▲] or [▼] repeatedly to display the desired item.
   For external calls, select "EXT RINGER".
   For internal calls, select "INT RINGER".
   For paging, select "PAGING".
   For alarm, select "ALARM".
7. Press [▶].
8. Press [▲] or [▼] repeatedly to select the desired setting from pattern "1" (default) to "20".
9. Press [▶] or [(≡)].
10. Press [✂⏻].

Note:

- If you select one of the melody ringer patterns, the ringer will continue to sound for 10 seconds when the caller hangs up before you answer. You may hear a dial tone or no one on the line when you answer a call.

Tone option settings

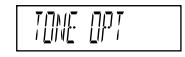

You can set the following tone/alarm on or off.

Key tone: Key tones, a confirmation tone or an error tone will sound. The default setting is "ON".

Call waiting tone: A call waiting tone will sound when an external call is received during an intercom call. The default setting is "ON".

Range warning alarm: An alarm will sound when you move out of range of a base unit. The default setting is "OFF".

Battery low alarm: An alarm will sound when the batteries need to be charged. The default setting is "ON".

1. Press [(≡)].
2. Press [▲] or [▼] repeatedly to display "SETTING HS".
3. Press [▶].

4. Press 【▲】 or 【▼】 repeatedly to display "TONE OPT".
5. Press 【▶】.
6. Press 【▲】 or 【▼】 repeatedly to display the desired item.
   For the key tone, select "KEY TONE".
   For the call waiting tone, select "CALL WAITING".
   For the range warning alarm, select "RANGE ALARM".
   For the battery low alarm, select "BATTERY LOW".
7. Press 【▶】.
8. Press 【▲】 or 【▼】 repeatedly to select "ON" or "OFF".
9. Press 【▶】 or 【▤】.
10. Press 【✂⏻】.

Display option settings

DISPLAY OPT

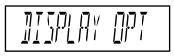

Selecting the standby mode display

1. Press 【▤】.
2. Press 【▲】 or 【▼】 repeatedly to display "SETTING HS".
3. Press 【▶】.
4. Press 【▲】 or 【▼】 repeatedly to display "DISPLAY OPT".
5. Press 【▶】.
6. Press 【▲】 or 【▼】 repeatedly to display "STANDBY MODE".
7. Press 【▶】.
8. Press 【▲】 or 【▼】 repeatedly to select the desired setting.
   "CLOCK" (default)**:** Time and date will be displayed. Set the time and date on the handset beforehand (page 23).
   "OFF": Deactivates this feature.
   "BS NO": The base unit number will be displayed.
   "HS NO": The handset number will be displayed.
9. Press 【▶】 or 【▤】.
10. Press 【✂⏻】.

Note:
- If you subscribe to a Caller ID service, the display will show the number of new calls even if "CLOCK" has been selected.

Selecting the talk mode display

1. Press 【▤】.
2. Press 【▲】 or 【▼】 repeatedly to display "SETTING HS".
3. Press 【▶】.
4. Press 【▲】 or 【▼】 repeatedly to display "DISPLAY OPT".
5. Press 【▶】.
6. Press 【▲】 or 【▼】 repeatedly to display "TALK MODE".
7. Press 【▶】.
8. Press 【▲】 or 【▼】 repeatedly to select the desired setting.
   "TALK TIME" (default): Length of a call will be displayed.
   "PHONE NO": A phone number will be displayed.
9. Press 【▶】 or 【▤】.
10. Press 【✂⏻】.

Note:
- Even if you select "PHONE NO", the other party's telephone number will not appear on your display in the following cases:
  – When you receive calls without subscribing to a Caller ID service, or
  – When you switch a call from the base unit to the handset.

Selecting the display language

1. Press 【▤】.
2. Press 【▲】 or 【▼】 repeatedly to display "SETTING HS".
3. Press 【▶】.
4. Press 【▲】 or 【▼】 repeatedly to display "DISPLAY OPT".
5. Press 【▶】.
6. Press 【▲】 or 【▼】 repeatedly to display "LANGUAGE".
7. Press 【▶】.
8. Press 【▲】 or 【▼】 repeatedly to select the desired language from "ENGLISH" (default), "GERMAN", "SPANISH", "FRENCH", "ITALIAN", "DUTCH", "TURKISH", "HUNGARIAN", "PORTUGUESE", "POLISH" and "F43 00".
9. Press 【▶】 or 【▤】.
10. Press 【✂⏻】.

Note:
- If you set a language you cannot read, reset the handset settings to their default settings (page 59).
- If "F43 00" is selected in step 8, the Command Interface will be displayed instead

of a language. Each menu will be displayed as an alphanumeric code. The Command Interface codes for each menu item are shown on page 59.

Call option settings

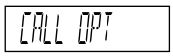

Setting the call BAR

This feature prohibits outgoing calls. When call BAR is turned on, only emergency calls and intercom calls can be made.

1. Press [(≡)].
2. Press [▲] or [▼] repeatedly to display "SETTING HS".
3. Press [▶].
4. Press [▲] or [▼] repeatedly to display "CALL OPT".
5. Press [▶].
6. Press [▲] or [▼] repeatedly to display "CALL BAR".
7. Press [▶].
8. Enter the 4-digit handset PIN (Personal Identification Number).
   - The default PIN is "0000".
9. Press [▲] or [▼] repeatedly to select the desired setting.
   "ON": The call BAR feature is available.
   "OFF" (default): Deactivates this feature.
10. Press [▶] or [(≡)].
11. Press [✆⏻].

Note:

- While this feature is activated, the following will be displayed.

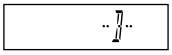

- If you turn this feature on, receiving faxes with the handset may not be possible (page 39).

Setting the direct call number

After the direct call number is set and this feature is set to on, you can dial the direct call number simply by pressing [✆]. You can receive incoming calls even if this feature is set.

1. Press [(≡)].
2. Press [▲] or [▼] repeatedly to display "SETTING HS".
3. Press [▶].
4. Press [▲] or [▼] repeatedly to display "CALL OPT".
5. Press [▶].
6. Press [▲] or [▼] repeatedly to display "DIRECT NO".
7. Press [▶].
8. Enter a direct call number, up to 24 digits.
   - To correct a mistake, press [C]. Digits are cleared from the right.
9. Press [(≡)] 3 times.
10. Press [✆⏻].

Changing the direct call setting

1. Press [(≡)].
2. Press [▲] or [▼] repeatedly to display "SETTING HS".
3. Press [▶].
4. Press [▲] or [▼] repeatedly to display "CALL OPT".
5. Press [▶].
6. Press [▲] or [▼] repeatedly to display "SET DIRECT".
7. Press [▶].
8. Press [▲] or [▼] repeatedly to select the desired setting.
   "ON": The direct call feature is available.
   "OFF" (default): Deactivates this feature.
9. Press [▶] or [(≡)].
10. Press [✆⏻].

Note:

- While this feature is activated, the following will be displayed.

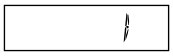

- When this feature is activated, you cannot receive faxes using the handset (page 39).

Other option settings

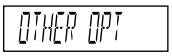

Changing the handset PIN (Personal Identification Number)

The handset's PIN is set at the factory to "0000". **If you change the PIN, please write down your new PIN as the unit will not reveal the PIN to you. If you forget your PIN, consult your nearest Panasonic service centre.**

1. Press [(≡)].
2. Press [▲] or [▼] repeatedly to display "SETTING HS".
3. Press [▶].
4. Press [▲] or [▼] repeatedly to display "OTHER OPT".

5. Press [▶].
6. Press [▲] or [▼] repeatedly to display "HSPIN CHANGE".
7. Press [▶].
8. Enter the current 4-digit handset PIN.
9. Enter the new 4-digit handset PIN.
10. Enter the new 4-digit handset PIN again to verify.
11. Press [OFF].

Setting the auto talk

1. Press [MENU].
2. Press [▲] or [▼] repeatedly to display "SETTING HS".
3. Press [▶].
4. Press [▲] or [▼] repeatedly to display "OTHER OPT".
5. Press [▶].
6. Press [▲] or [▼] repeatedly to display "AUTO TALK".
7. Press [▶].
8. Press [▲] or [▼] repeatedly to select the desired setting.
   "ON": You can answer a call by just lifting the handset off the base unit without pressing [TALK].
   "OFF" (default): Deactivates this feature.
9. Press [▶] or [MENU].
10. Press [OFF].

Setting the battery type

1. Press [MENU].
2. Press [▲] or [▼] repeatedly to display "SETTING HS".
3. Press [▶].
4. Press [▲] or [▼] repeatedly to display "OTHER OPT".
5. Press [▶].
6. Press [▲] or [▼] repeatedly to display "BATTERY TYPE".
7. Press [▶].
8. Press [▲] or [▼] repeatedly to select the desired setting.
   "NI-MH" (default): Nickel metal hydride batteries are used.
   "NI-CD": Nickel cadmium batteries are used.
9. Press [▶] or [MENU].
10. Press [OFF].

Resetting the handset settings to their default settings

The handset can be reset to the following default settings.
The words in parentheses indicate the codes used if the Command Interface is selected for the display language (page 57).

Feature	Default setting
Time alarm mode ("F1")	"OFF"
Alarm time	Clear
Ringer volume ("F21")	High
External ringer pattern ("F22")	"1"
Internal ringer pattern ("F23")	"1"
Paging tone pattern ("F24")	"1"
Alarm tone pattern ("F25")	"1"
Key tone ("F31")	"ON"
Call waiting tone ("F32")	"ON"
Range warning alarm ("F33")	"OFF"
Battery low alarm ("F34")	"ON"
Standby mode display ("F41")	"CLOCK"
Talk mode display ("F42")	"TALK TIME"
Display language ("F43")	"ENGLISH"
Call BAR mode ("F51")	"OFF"
Direct call mode ("F53")	"OFF"
Direct call number ("F52")	Clear
Handset PIN ("F61")	"0000"
Auto talk ("F62")	"OFF"
Base unit access ("F9") (page 63)	"AUTO"
Redial memory	All clear
Receiver volume	Medium

1. Press [OFF].
2. Press [MENU].
3. Press [▼].
4. Press [▶].
5. Press [▲].

6. Press 【▶】.
7. Enter the 4-digit handset PIN.
   - The default PIN is "0000".
8. Press 【▲】.
9. Press 【▶】 or 【☰】.
10. Press 【✂⏻】.

Note:
- Battery type selection (page 59) will not be reset.
- The phonebook data (page 29) will be saved.

8.5 Handset programming using the base unit PIN

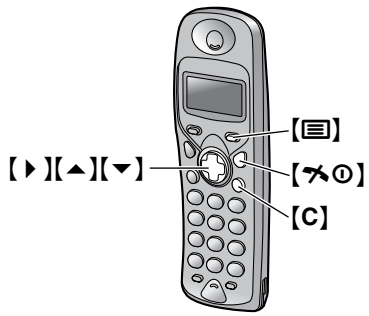

To exit programming, press 【✂⏻】 any time.

Changing base unit PIN

The base unit's PIN is set at the factory to "0000". **If you change the PIN, please write down your new PIN as the unit will not reveal the PIN to you. If you forget your PIN, consult your nearest Panasonic service centre.**

1. Press 【☰】.
2. Press 【▲】 or 【▼】 repeatedly to display "SETTING BS".
3. Press 【▶】.
   - "INPUT CODE" will be displayed.
4. Press 【5】.
5. Enter the current 4-digit base unit PIN.
6. Enter the new 4-digit base unit PIN.
7. Enter the new 4-digit base unit PIN again to verify.
8. Press 【✂⏻】.

Setting call restriction

You can restrict selected handset(s) from dialling selected phone numbers. You can assign up to 10 call restriction numbers (up to 8 digits). If you dial a restricted number, the call will not be connected and the restricted number will flash on the display.

1. Press 【☰】.
2. Press 【▲】 or 【▼】 repeatedly to display "SETTING BS".
3. Press 【▶】.
   - "INPUT CODE" will be displayed.
4. Press 【6】.
5. Enter the 4-digit base unit PIN.
   - The default PIN is "0000".
   - All the registered handset numbers are displayed.
   - If you programmed previously, the pre-selected handset number flashes.
6. Press the desired handset number(s).
   - The selected handset number will flash.
   - To cancel the selected handset number, press the number again. The number will stop flashing.
7. Press 【▶】.
8. Enter the phone number to be restricted, up to 8 digits.
   - Do not enter the same number as programmed for the fax activation code (feature #41, page 53).
9. Press 【▶】 or 【☰】.
   - To enter other numbers, repeat steps 8 and 9 (up to 10 numbers).
10. Press 【✂⏻】.

Turning off/on call restriction

1. Press 【☰】.
2. Press 【▲】 or 【▼】 repeatedly to display "SETTING BS".
3. Press 【▶】.
   - "INPUT CODE" will be displayed.
4. Press 【6】.
5. Enter the 4-digit base unit PIN.
   - The default PIN is "0000".
6. Press the desired handset number.
   - Handset numbers will be displayed. Flashing numbers indicate call restriction is on; non-flashing numbers indicate call restriction is off. Press the desired handset number to turn off/on.
7. Press 【▶】 or 【☰】.
8. Press 【✂⏻】.

Cancelling a call restricted number

1. Press 【☰】.

2. Press 【▲】 or 【▼】 repeatedly to display "SETTING BS".
3. Press 【▶】.
   - "INPUT CODE" will be displayed.
4. Press 【6】.
5. Enter the 4-digit base unit PIN.
   - The default PIN is "0000".
6. Press 【▶】 repeatedly to display the desired call restricted number.
7. Press 【C】.
8. Press 【▶】 or 【☰】.
9. Press 【☎】.

Resetting the handset settings that use the base unit PIN to their default settings

The handset can be reset to the following default settings.

Feature	Default setting
Ringer mode (page 63)	"1"
Number of rings (page 64)	"3"
Base unit PIN	"0000"
Call restriction	All clear
Caller information (page 33)	All clear

1. Press 【☰】.
2. Press 【▲】 or 【▼】 repeatedly to display "SETTING BS".
3. Press 【▶】.
   - "INPUT CODE" will be displayed.
4. Press 【0】.
5. Enter the 4-digit base unit PIN.
   - The default PIN is "0000".
6. Press 【▶】 or 【☰】.
7. Press 【☎】.

9.1 Operating additional units

Additional handsets: Additional handsets are available for purchase (page 11). Up to 6 handsets can be registered to a single base unit. Using additional handsets allows you to have an intercom call while simultaneously conducting a call to an outside line.

- Additional handsets have answering device controls printed on their cases, however, remote operation of the base unit's answering device is not possible.

Additional base units: You can register and operate your handset with up to 4 base units. Each base unit forms 1 radio cell. If the individual base units are linked to the same telephone line then you can extend the operating range of the system by positioning the base units so that the two radio cells overlap. If the handset is set to "AUTO" in base unit selection (page 63), then in standby mode the handset will automatically swap to the second base if the range on the first base is exceeded. It is not possible to transfer calls between base units (only between handsets linked to the same base unit).

Example: Additional handsets registered to 2 base units.

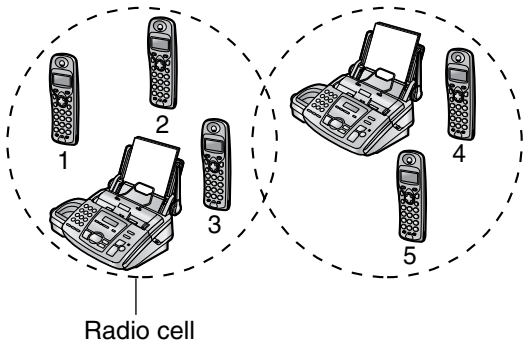

Note:

- Calls are disconnected when the handset moves from one radio cell to another.

9.2 Registering a handset to a base unit

The handset supplied with the base unit is already registered. If an optional handset is purchased, it must be registered.

- Keep the front cover page open for button locations.

Important:

- **After pressing [LOCATOR/HOLD] in step 8, the rest of the procedures must be completed within 1 minute.**
- **Charge the optional handset batteries for 7 hours before initial use.**

To exit programming, press [ ] any time.

1 Press [ ].

2 Press [▲] or [▼] repeatedly to display "SETTING HS".

3 Press [▶].

4 Press [▲] or [▼] repeatedly to display "REGISTRATION".

5 Press [▶].

6 Press [▲] or [▼] repeatedly to display "REGISTER HS".

7 Press [▶].

8 Press and hold **[LOCATOR/HOLD]** on the base unit until the registration tone sounds.

- It may take up to about 10 seconds until the registration tone sounds.
- "REGISTRATION" will be displayed on the base unit.
- If all registered handsets start ringing (paging), press **[LOCATOR/HOLD]** to stop paging then start over again.

9 Using the handset, press [▲] or [▼] repeatedly to select the desired base unit number available to register the handset, and press [▶].

10 After "BS PIN" is displayed, enter the 4-digit base unit PIN, using the handset dial keypad.

- The default PIN is "0000".

11 Press [▶] or [ ].

- When a handset is registered successfully, a confirmation tone will sound and ▼ will light.

9.2.1 Cancelling a handset

Each handset can cancel itself or another handset.

1 Press [ ].

2 Press [▲] or [▼] repeatedly to display "SETTING BS".

3 Press [▶].

- "INPUT CODE" will be displayed.

4 Press [7].

5 Enter the 4-digit base unit PIN.
- The default PIN is "0000".

6 Press the desired handset number.
- The selected handset number will flash.

7 Press [▶] or [☰].

8 After "SETTING BS" is displayed, press [✆].

9.2.2 Cancelling a base unit

You can cancel any base unit that your handset is registered to.

1 Press [☰].

2 Press [▲] or [▼] repeatedly to display "SETTING HS".

3 Press [▶].

4 Press [▲] or [▼] repeatedly to display "REGISTRATION".

5 Press [▶].

6 Press [▲] or [▼] repeatedly to display "CANCEL BS".

7 Press [▶].

8 Enter the 4-digit handset PIN.
- The default PIN is "0000".

9 Press [▲] or [▼] repeatedly to select the desired base unit number.

10 Press [▶].
- The selected base unit number will flash.

11 Press [▶].

12 Press [▲] or [▼] repeatedly to select "YES".
- To stop cancelling, select "NO".

13 Press [▶] or [☰].

14 Press [✆].

9.2.3 Selecting a base unit

When "AUTO" (automatic base unit access) is selected, if you move outside of the radio range of the current base unit, the handset automatically searches for other registered base units.
When a specified base unit is selected, the handset will access that base unit only. Calls (both incoming and outgoing) can be conducted only via the selected base unit, even if the radio cells overlap with neighbouring base units.
- The default setting is "AUTO".

1 Press [☰].

2 Press [▲] or [▼] repeatedly to display "SETTING HS".

3 Press [▶].

4 Press [▲] or [▼] repeatedly to display "SELECT BS".

5 Press [▶].

6 Press [▲] or [▼] repeatedly to select "AUTO" or a specific base unit number.

7 Press [▶] or [☰].
- The handset starts searching for the base unit.

9.3 Selecting the ringer mode

You can select how the handsets ring for incoming calls from 3 patterns:
– "1": All handsets ring (default).
– "2": Selected handset(s) rings.
– "3": Selected handset(s) rings, then all handsets ring.

Setting all handsets to ring

1 Press [☰].

2 Press [▲] or [▼] repeatedly to display "SETTING BS".

3 Press [▶].
- "INPUT CODE" will be displayed.

4 Press [1].

5 Enter the 4-digit base unit PIN.
- The default PIN is "0000".

6 Press [1] to select "1".

7 Press [▶] or [☰].

8 Press [✆].

Setting the selected handset(s) to ring

1 Press [☰].

2 Press [▲] or [▼] repeatedly to display "SETTING BS".

3 Press [▶].
- "INPUT CODE" will be displayed.

4 Press [1].

5 Enter the 4-digit base unit PIN.
- The default PIN is "0000".

6 Press [2] to select "2".

- All the registered handset numbers are displayed and the pre-selected handset number flashes.

7 Press the desired handset number(s).
- The selected handset number(s) will flash.
- To cancel a selected handset number, press the number again. The number will stop flashing.

8 Press 【▶】 or 【☰】.

9 Press 【✆】.

Setting the selected handset(s) then all handsets to ring

1 Press 【☰】.

2 Press 【▲】 or 【▼】 repeatedly to display "SETTING BS".

3 Press 【▶】.
- "INPUT CODE" will be displayed.

4 Press 【1】.

5 Enter the 4-digit base unit PIN.
- The default PIN is "0000".

6 Press 【3】 to select "3".
- All the registered handset numbers are displayed and the pre-selected handset number flashes.

7 Press the desired handset number(s).
- The selected handset number(s) will flash.
- To cancel a selected handset number, press the number again. The number will stop flashing.

8 Press 【▶】.

9 Press the desired number of rings for the selected handset(s) from "1" to "6", using the dial keypad.
- The default setting is "3".
- The selected number of rings will be shown on the right edge of the display.

10 Press 【▶】 or 【☰】.

11 Press 【✆】.

9.4 Intercom between handsets

You can use your handsets as a 2-way intercom.
- Keep the front cover page open for button locations.

Example: When handset 1 calls handset 2

1. **Handset 1:**
   Press 【INT】 and 【2】 (desired handset number).
2. **Handset 2:**
   Press 【📞】 to answer.
3. When finished talking, press 【✆】.

Note:
- Intercom calls can be conducted within the radio cell of the current base unit, but not with units in neighbouring radio cells.

9.5 Transferring calls between handsets/Conference call

Intercom can be used to transfer an external call between handsets that are registered to the same base unit.
- Keep the front cover page open for button locations.

Example: When handset 1 transfers a call to handset 2

1. **Handset 1:**
   During an external call, press 【INT】 and 【2】 (desired handset number).
   - If there is no answer, press 【INT】 to return to the external call.
2. **Handset 2:**
   Press 【📞】 to answer the page.
   - Handset 2 can talk with handset 1.
   - The external call will be put on hold.
3. **Handset 1:**
   To complete the call transfer, press 【✆】.
   OR
   To establish the conference call, press 【3】.

To transfer a call directly, without speaking to handset 2

After step 1, press 【✆】 on handset 1.
If the transferred call is not answered within 30 seconds, handset 1 will ring again.

10.1 Error messages – Reports

If a problem occurs during fax transmission or reception, one of the following communication messages will be printed on the sending and journal reports (page 36).

COMMUNICATION ERROR (Code: 40-42, 46-72, FF)

- A transmission or reception error occurred. Try again or check with the other party.

COMMUNICATION ERROR (Code: 43, 44)

- A line problem occurred. Connect the telephone line cord to a different jack and try again.
- An overseas transmission error occurred. Try using the overseas mode (feature #23, page 52).

DOCUMENT JAMMED

- The document is jammed. Remove the jammed document (page 72).

ERROR-NOT YOUR UNIT (Code: 54, 59, 70)

- A transmission or reception error occurred because of a problem with the other party's fax machine. Check with the other party.

MEMORY FULL

- The memory is full of received documents due to a lack of recording paper or a recording paper jam. Install paper (page 17) or clear the jammed paper (page 70).

NO DOCUMENT

- The document was not fed into the unit properly. Re-insert the document and try again.

OTHER FAX NOT RESPONDING

- The other party's fax machine is busy or has run out of recording paper. Try again.
- The document was not fed properly. Re-insert the document and try again.
- The other party's fax machine rings too many times. Send the fax manually (page 35).
- The other party's machine is not a fax machine. Check with the other party.
- The number you dialled is not in service.

PRESSED THE STOP KEY

- **【STOP】** was pressed and fax communication was cancelled.

OK

- Fax communication was successful.

10.2 Error messages – Base unit display

If the unit detects a problem, one or more of the following messages will appear on the display.

```
CALL SERVICE
```

```
CALL SERVICE 2
```

- There is something wrong with the unit. Contact our service personnel.

```
CHECK DOCUMENT
```

- The document was not fed into the unit properly. Re-insert the document. If misfeeding occurs frequently, clean the document feeder rollers (page 73) and try again.
- Attempted to transmit a document longer than 600 mm. Press **【STOP】** to remove the document. Divide the document into two or more sheets and try again.

```
CHECK MEMORY
```

- The base unit memory (telephone numbers, parameters, etc.) has been erased. Re-program.

```
CHECK PAPER
```

- The recording paper is not installed or the unit has run out of paper. Install paper and press **【START】** to clear the message.
- The recording paper was not fed into the unit properly (page 72). Reinstall paper (page 17) and press **【START】** to clear the message.
- The recording paper has jammed near the recording paper entrance. Clear the jammed paper (page 70) and press **【START】** to clear the message.

```
COVER OPEN
    ↕
CHECK FILM
```

- The covers are open. Close them.
- The ink film is empty. Replace the ink film with a new one (page 15).
- The ink film is not installed. Install it (page 14).

- The ink film is slack or creased. Tighten it (see step 5 on page 15).

```
DIRECTORY FULL
```

- There is no space to store new entries in navigator directory. Erase unnecessary entries (page 32).

```
 FAX IN MEMORY
```

- The unit has a document in memory. See the other displayed message instructions to print out the document.

```
FAX MEMORY FULL
```

- The memory is full of received documents due to a lack of recording paper or a recording paper jam. Install paper (page 17) or clear the jammed paper (page 70).
- When performing memory transmission, the document being stored exceeded the memory capacity of the unit. Transmit the entire document manually.

```
HANG UP HANDSET
```

- Handset(s) is not hung up. Press **【】** on the handset(s).

```
   MEMORY FULL
```

- When making a copy, the document being stored exceeded the memory capacity of the unit. Press **【STOP】** to clear the message. Divide the document into sections.

```
 MESSAGE FULL
```

- There is no room left in memory to record voice messages. Erase unnecessary messages (page 45, 49).

```
  MODEM ERROR
```

- There is something wrong with the modem circuit. Contact our service personnel.

```
 NO FAX REPLY
```

- The other party's fax machine is busy or has run out of recording paper. Try again.

```
 PAPER JAMMED
```

- A recording paper jam occurred. Clear the jammed paper (page 70).

```
  PLEASE WAIT
```

- The unit is checking that there is no slack or crease on the ink film. Wait for a moment while the check is completed.

```
POLLING ERROR
```

- The other party's fax machine does not offer the polling function. Check with the other party.

```
REDIAL TIME OUT
```

- The other party's fax machine is busy or has run out of recording paper. Try again.

```
REMOVE DOCUMENT
```

- The document is jammed. Remove the jammed document (page 72).

```
SEND CANCELLED
```

- You pressed **【】** while the unit was in redial mode for fax transmission. The redialling was cancelled.

```
TRANSMIT ERROR
```

- A transmission error occurred. Try again.

```
UNIT OVERHEATED
```

- The unit is too hot. Let the unit cool down.

10.3 When a function does not work, check here

If you still have difficulties after following the instructions in this section, reset the unit. Disconnect the power cord and turn off the handset. Remove the batteries, then re-insert them. Reconnect the power cord and turn on the handset.

10.3.1 General

I cannot make and receive calls.

- The power cord or telephone line cord is not connected. Check the connections.
- If you used a splitter to connect the unit, remove the splitter and connect the unit to the wall jack directly. If the unit operates properly, check the splitter.

The unit does not work.

- Disconnect the unit from the telephone line and connect the line to a known working telephone. If the working telephone operates

properly, contact our service personnel to have the unit repaired. If the working telephone does not operate properly, contact your telephone company.

The unit does not ring.
- The ringer volume is turned off. Adjust it (page 21, 22).
- The ring setting of feature #06 is set to "RINGER OFF". Change to another ring setting (page 52).

The base unit rings even when its ringer volume is set to off.
- Handset(s) is not hung up. Press 【✆】.

The unit displays "CHECK PAPER" though the paper is inserted.
- The paper is inserted halfway. Insert it correctly (page 17) and press 【START】 to clear the message.

The other party complains they only hear a fax tone and cannot talk.
- FAX ONLY mode is set. Tell the other party the number is only used for faxes.
- Change to TEL mode (page 38) or TAD/FAX mode (page 39).

The 【REDIAL/PAUSE】/【○●】 button does not function properly.
- If this button is pressed during dialling, a pause will be inserted. If pressed immediately after a dial tone is obtained, the last number dialled will be redialled.

The receiving mode does not function properly.
- The Distinctive Ring is set (feature #31, page 41).

During programming, I cannot enter the code or ID number.
- All or part of the numbers are the same. Change the number: feature #11 (page 52), #41 (page 53), #51 (page 54) and #52 (page 54).

The ink film runs out quickly.
- The help printing function, copy function, and reports also use ink film.

The unit beeps.
- Recording paper or ink film has run out. Press 【STOP】 to stop the beeps and install paper/ink film.

The speakerphone is not working.
- Use the speakerphone in a quiet room.
- If you have difficulty hearing the other party, adjust the volume.

The 【LOCATOR/HOLD】 button does not function.
- The handset is too far from the base unit.
- The handset is engaged in an external call.

10.3.2 Cordless handset

The handset display is blank.
- The handset is not turned on. Turn the power on (page 18).

The handset does not work.
- Make sure that the batteries are installed correctly (page 17).
- Charge the batteries fully (page 20).
- Clean the charge/battery contacts and charge again (page 20).
- Turn the handset power off, then on (page 18).

Battery icon is not counting up while charging.
- Clean the charge/battery contacts and charge again (page 20).
- The power cord is disconnected. Plug in the power cord.

is flashing.
- The handset is not registered to the base unit. Register it.
- The handset is too far from the base unit. Move closer and try again.
- The power cord is not connected. Check the connections.

A busy tone is heard when 【✆】 is pressed.
- The handset is too far from the base unit. Move closer and try again.
- The base unit or another handset is in use. Wait for the other user to complete the call.
- Another handset is not hung up after being used. Press 【✆】 on that handset.

I cannot dial out.
- Call BAR mode is set. Turn it off (page 58).
- The dialled number is restricted. Remove the number from the call restricted list (page 60).
- Key lock mode is on. Turn it off (page 27).

Static, sound cuts in/out, fades. Interference from other electrical units.
- Locate the handset and the base unit away from other electrical appliances.
- Move closer to the base unit.
- Raise the base unit antenna.

The handset stops working while being used.
- Disconnect the power cord and turn off the handset to reset the unit. Connect the power cord, turn on the handset and try again.
- You pressed a dialling button when the call BAR feature was turned on (page 58).
- You dialled a number registered for the call restriction feature (page 60).

I cannot store a name and telephone number in the phonebook or hot key.
- You cannot store a name and number while the handset is in the talk or intercom mode.
- Do not pause for over 60 seconds while storing.

While storing a name and telephone number in the phonebook or hot key, the handset starts to ring.
- To answer a call, press 【 】. Programming will be cancelled. Store the name and number again.

I cannot redial by pressing 【 】.
- If the last number dialled was more than 24 digits long, the number will not be redialled.

The handset beeps intermittently and/or flashes.
- Charge the batteries fully (page 20).

I charged the batteries fully, but still flashes.
- Clean the charge contacts and charge again (page 20).
- It is time to replace the batteries (page 17).

disappears and the unit stops charging when the handset is on the cradle.
- Nickel cadmium batteries are inserted when the battery type is set to “NI-MH” (nickel metal hydride). Change the battery type setting to “NI-CD” (nickel cadmium) (page 59).

The handset display exits the Caller ID List while viewing the caller information.
- Do not pause for over 60 seconds while searching.

I cannot register a handset to a base unit.
- Maximum number of base units have already registered to the handset. Delete unused base unit registrations from the handset.
- Maximum number of handsets have already registered to the base unit. Delete unused handset registrations from the base unit.
- Wrong PIN number has been entered. If you forget your PIN, consult your nearest Panasonic service centre.
- Locate the handset and the base unit away from other electrical appliances.

10.3.3 Fax – sending

I cannot send documents.
- The other party’s fax machine is busy or has run out of recording paper. Try again.
- The other party’s machine is not a fax machine. Check with the other party.
- The other party’s fax machine rings too many times. Send the fax manually (page 35).

The other party complains that letters on their received document are distorted or not clear.
- If your line has special telephone services such as call waiting, the service may have been activated during fax transmission. Connect the unit to a line that does not have these services.
- An extension telephone on the same line is off the hook. Hang up the extension telephone and try again.
- Try copying the document. If the copied image is clear, there may be something wrong with the other party’s machine.

The other party complains that smudges or black lines appear on their received document.
- The glass or rollers are dirty. Clean them (page 73).

I cannot send a fax overseas.
- Use the overseas transmission mode of feature #23 (page 52).
- Add two pauses at the end of the telephone number or dial manually.

10.3.4 Fax – receiving

I cannot receive documents automatically.
- The receiving mode is set to TEL mode. Set to TAD/FAX mode (page 39) or FAX ONLY mode (page 39).

- The time taken to answer the call is too long. Decrease the number of rings in feature #06 (page 52).
- The greeting message is too long. Record a shorter message (page 44).

The display shows "CONNECTING.....", but faxes are not received.

- The incoming call is not a fax. Change the receiving mode to TAD/FAX mode (page 39) or TEL mode (page 38).

A blank sheet is ejected.

- If a blank sheet is ejected after the received document is printed out, the receiving reduction rate is not programmed correctly. Program the proper rate in feature #36 (page 53).
- The other party placed the document in their fax machine the wrong way. Check with the other party.

A white line or a smudge appears on your recording paper.

- The glass or rollers are dirty. Clean them (page 73).

The printing quality is poor.

Please do not reuse the ink film!
Please use genuine Panasonic replacement film. Refer to page 11 for further details.

- The other party sent a faint document. Ask them to send a clearer copy of the document.
- The thermal head is dirty. Clean it (page 73).
- Some paper has instructions recommending which side to print on. Try turning the paper over.
- You may have used paper with a cotton and/or fibre content that is over 20%, such as letterhead or resume paper.

I cannot receive documents by pressing 【✳】【#】【9】on the handset.

- You must set the remote fax activation to on (feature #41, page 53) beforehand.
- Press 【✳】【#】【9】firmly.
- The memory is full of received documents due to a lack of recording paper or a recording paper jam. Install paper (page 17) or clear the jammed paper (page 70).
- The call BAR feature was activated on the handset. Deactivate this feature (page 58).
- The same number as the remote fax activation code (feature #41 of base unit programming on page 53) is programmed as a call restricted number (page 60) on the handset. Change the code or cancel the restrict number from call restriction feature (page 60).
- The direct call feature (page 58) was activated on the handset. Deactivate this feature.

The other party complains that they cannot send a document.

- The memory is full of received documents due to a lack of recording paper or a recording paper jam. Install paper (page 17) or clear the jammed paper (page 70).
- The unit is not in TAD/FAX or FAX ONLY mode. Select the desired mode using feature #77 (page 55) and press **【AUTO ANSWER】** repeatedly until TAD/FAX or FAX ONLY mode is displayed.

I cannot select the desired receiving mode.

- If you want to set TAD/FAX or FAX ONLY mode:
  - select the desired mode using feature #77 (page 55), and
  - press **【AUTO ANSWER】** repeatedly until the desired mode is displayed.
- If you want to set TEL mode:
  - press **【AUTO ANSWER】** repeatedly until TEL mode is displayed.

10.3.5 Copying

The unit will not make a copy.

- You cannot make a copy during programming. Make the copy after programming.
- You cannot make a copy during telephone conversation.

A black line, a white line or smudge appears on the copied document.

- The glass or rollers are dirty. Clean them (page 73).

The copied image is distorted.

- The thermal head is dirty. Clean it (page 73).

The printing quality is poor.

Please do not reuse the ink film!
Please use genuine Panasonic replacement film. Refer to page 11 for further details.

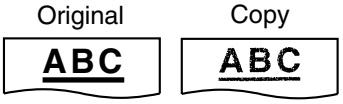

- Some paper has instructions recommending which side to print on. Try turning the paper over.
- You may have used paper with a cotton and/or fibre content that is over 20%, such as letterhead or resume paper.

10.3.6 Answering device

I cannot retrieve recorded messages from a remote location.

- Press the remote operation ID correctly and firmly (page 46).

Messages in the mailbox do not play back.

- The mailbox password is wrong. Enter the correct password.
  - For mailbox 1 password, see feature #51 (page 54).
  - For mailbox 2 password, see feature #52 (page 54).

The other party complains that they cannot leave a voice message.

- The memory is full. Erase unnecessary messages (page 45, 49).

- Panasonic Australia operates a toll free Customer Care Centre. Please call 132600 for assistance.
  or visit the website www.panasonic <http://www.panasonic.com.au>

10.3.7 If a power failure occurs

- The unit will not function.
- The unit is not designed for making emergency telephone calls when the power fails. Alternative arrangements should be made for access to emergency services.
- Fax transmission and reception will be interrupted.
- If delayed transmission (feature #25, page 52) is programmed and the start time is passed during a power failure, transmission will be attempted soon after power is restored.
- If any fax documents are stored in the memory, they will be lost. When power is restored, a power down report will be printed out stating which contents in the memory have been erased.

10.4 Recording paper jam

10.4.1 When the recording paper has jammed in the unit

The display will show the following.

```
PAPER JAMMED
```

1 Open the front cover (①) by pulling up the centre part (②).

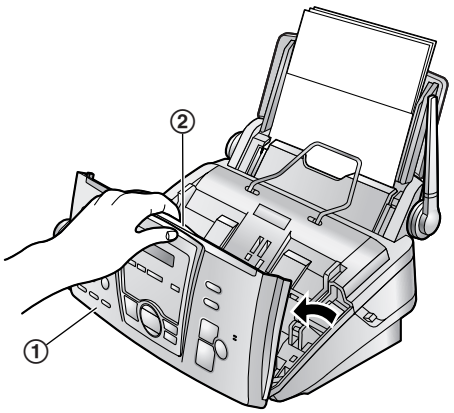

2 Release the back cover by pushing the green button (①) on the right side of the unit.
OR
Release the back cover by pushing the green lever (②) in the unit.

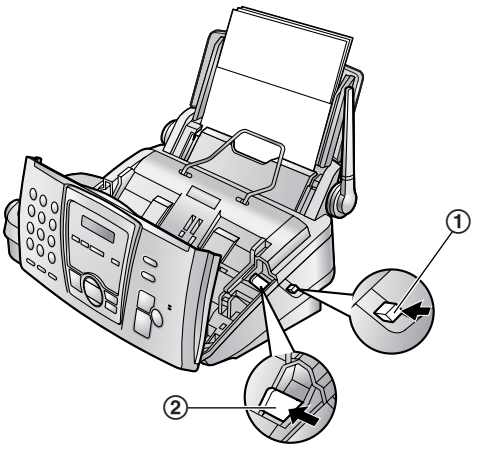

3 Open the back cover (①).

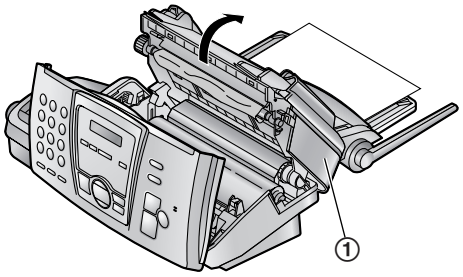

4 Remove the jammed recording paper (①).

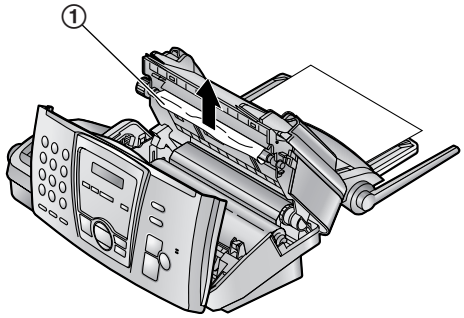

5 Turn the gear with the blue core (①) in the direction of the arrow.

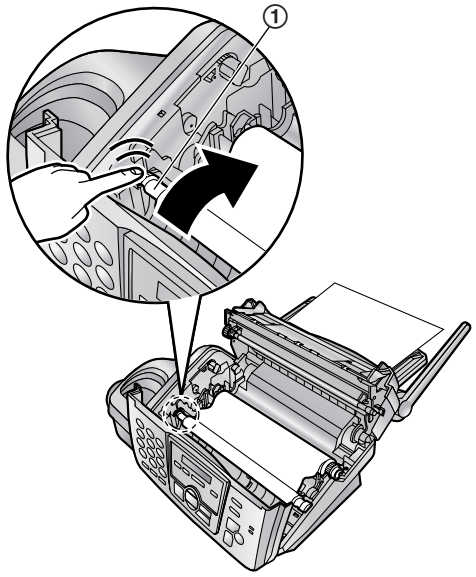

- Make sure that the ink film is wrapped around the blue core (②) at least once.

Correct

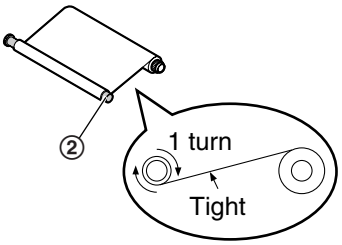

Incorrect

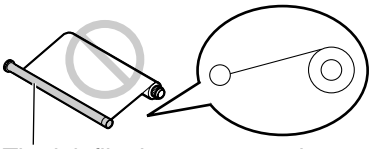

The ink film is not wrapped around the blue core.

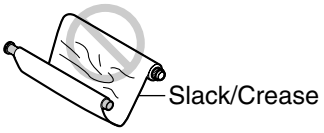

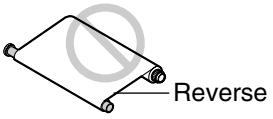

6 First close the back cover securely (①) by pushing down on the dotted area at both ends (②). Then close the front cover securely (③).

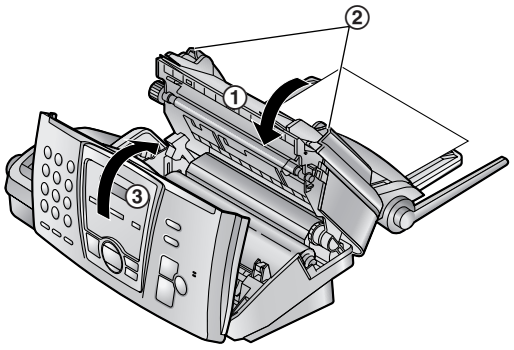

7 Remove the recording paper and straighten. Pull the tension plate forward (①) and hold open while inserting the paper.

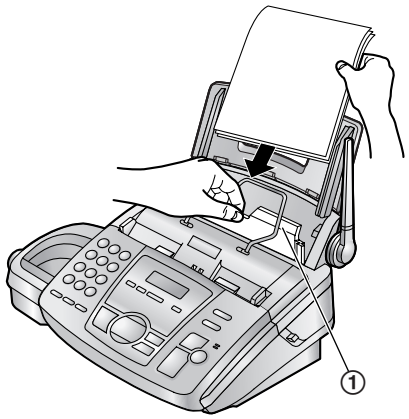

10.4.2 When the recording paper was not fed into the unit properly

The display will show the following.

```
CHECK PAPER
```

Remove the recording paper and straighten. Pull the tension plate (①) forward and hold open while inserting paper. Press **【START】** to clear the message.

10.5 Document jams – sending

1 Open the front cover (①) by pulling up the centre part (②). Remove the jammed document carefully (③).

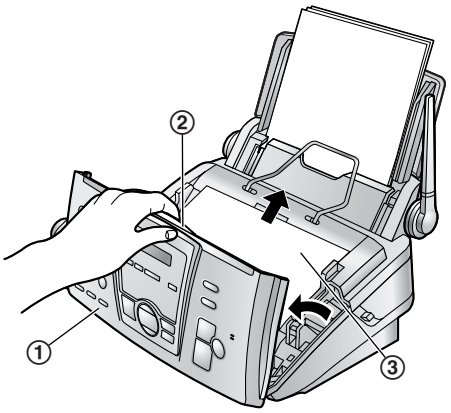

2 Close the front cover securely (①).

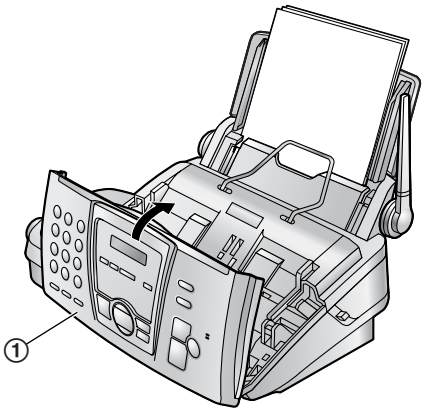

Note:

- Do not pull out the jammed paper forcibly before opening the front cover.

10.6 Document feeder cleaning

Clean the document feeder in the following cases:
– If misfeeding of the document occurs frequently.
– If smudges or black/white lines appear on the original document when transmitting or copying.

1 Disconnect the power cord and the telephone line cord.

2 Open the front cover (①) by pulling up the centre part (②).

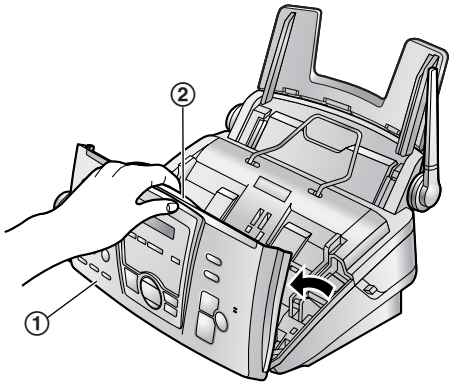

3 Clean the document feeder rollers (①) and rubber flap (②) with a cloth moistened with isopropyl rubbing alcohol, and let all parts dry thoroughly. Clean the glass (③) with a soft, dry cloth.

Caution:
- **Do not use paper products, such as paper towels or tissues.**

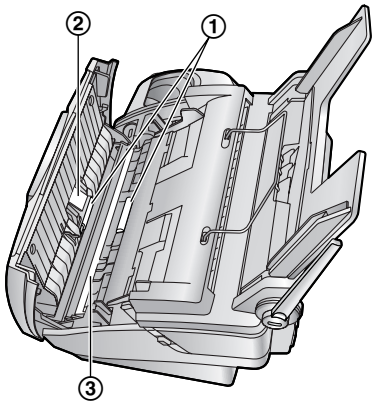

4 Close the front cover securely (①).

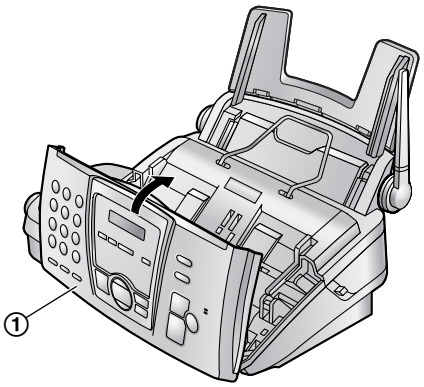

5 Connect the power cord and the telephone line cord.

10.7 Thermal head cleaning

If smudges or black/white lines appear on a copied/received document, check whether there is dust on the thermal head. Clean the thermal head to remove the dust.

1 Disconnect the power cord and the telephone line cord.

2 Open the front cover (①) by pulling up the centre part (②).

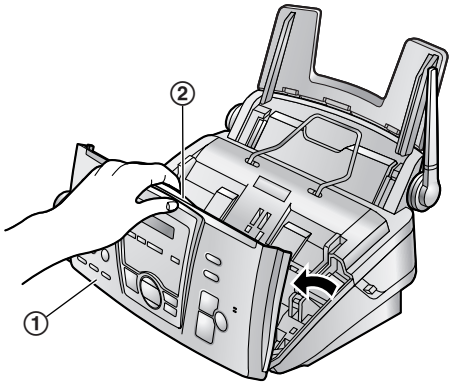

3 Release the back cover by pushing the green button (①) on the right side of the unit.
OR

Release the back cover by pushing the green lever (②) in the unit.

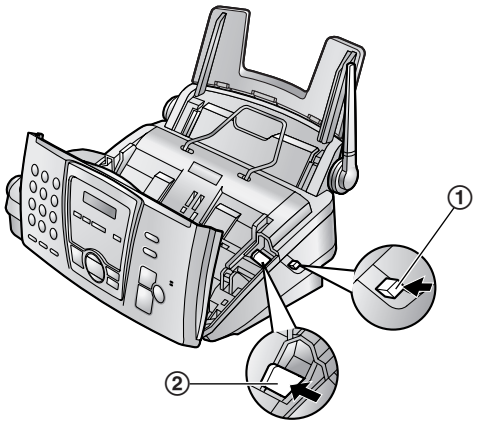

4 Open the back cover (①). Remove the ink film (②).

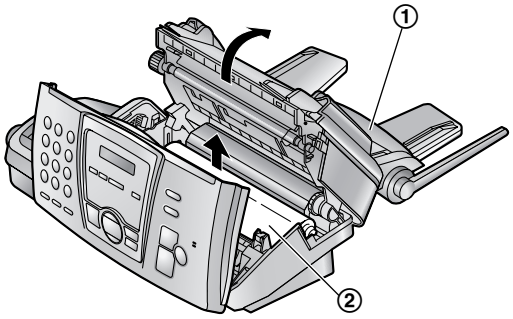

5 Clean the thermal head (①) with a cloth moistened with isopropyl rubbing alcohol, and let it dry thoroughly.

Caution:

- **To prevent a malfunction due to static electricity, do not use a dry cloth and do not touch the thermal head directly.**

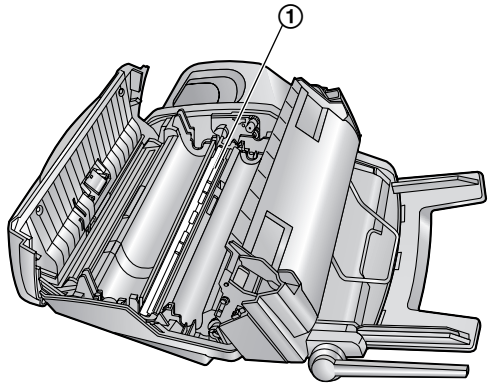

6 Reinstall the ink film and close the covers (see steps 4 to 6 on page 15).

7 Connect the power cord and the telephone line cord.

11.1 Reference lists and reports

You can print out the following lists and reports for your reference.

Setup list:
provides you with the current settings of the basic and advanced programming features (page 51 to page 55).

Fax number list:
provides you with names and numbers which are stored in the navigator directory.

Journal report:
keeps records of fax transmission and reception. This report will be printed automatically after every 30 fax communications (feature #22, page 52).

Printer test:
allows you to check the print quality of your unit. If the test print has a smudge, or blurred points or lines, clean the thermal head (page 73).

Broadcast programming list:
provides you with names and numbers which are stored in the broadcast memory (page 37).

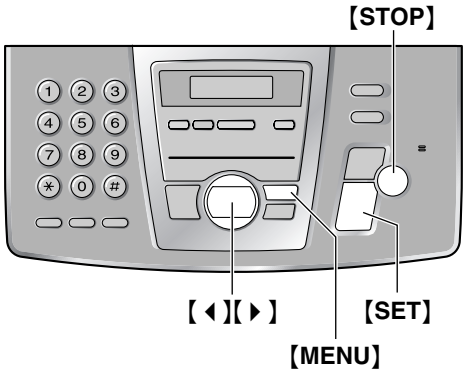

1 Press **【MENU】** repeatedly to display "PRINT REPORT".

2 Press **【◀】** or **【▶】** repeatedly to display the desired item.

3 Press **【SET】** to start printing.
- To stop printing, press **【STOP】**.

4 Press **【MENU】**.

11.2 Technical data about this product

11.2.1 Base unit

Applicable lines:	Public Switched Telephone Network
Document size:	Max. 216 mm in width, Max. 600 mm in length
Effective scanning width:	208 mm
Effective printing width:	202 mm
Transmission time[*1]:	Approx. 8 s/page (ECM-MMR)[*2]
Scanning density:	Horizontal: 8 pels/mm Vertical: 3.85 lines/mm – in standard resolution, 7.7 lines/mm – in fine/photo resolution, 15.4 lines/mm – in super fine resolution
Photo resolution:	64-level
Scanner type:	Contact Image Sensor
Printer type:	Thermal Transfer on plain paper
Data compression system:	Modified Huffman (MH), Modified READ (MR), Modified Modified READ (MMR)
Modem speed:	14,400 / 12,000 / 9,600 / 7,200 / 4,800 / 2,400 bps; Automatic Fallback
Operating environment:	5°C–35°C, 20%–80% RH (Relative Humidity)
Dimensions:	Approx. height 199 mm × width 384 mm × depth 282 mm
Mass (Weight):	Approx. 3.6 kg
Power consumption:	Standby: Approx. 10 W Transmission: Approx. 22 W Reception: Approx. 43 W (When receiving a 20% black document) Copy: Approx. 45 W (When copying a 20% black document) Maximum: Approx. 135 W (When copying a 100% black document)
Power supply:	220–240 V AC, 50/60 Hz
Fax memory capacity:	Approx. 25 pages of memory transmission Approx. 28 pages of memory reception (Based on the ITU-T No. 1 Test Chart in standard resolution, without using the Error Correction Mode.)
Voice memory capacity[*3]:	Approx. 18 minutes of recording time including greeting messages

*1 Transmission speed depends upon the contents of the pages, resolution, telephone line conditions and capability of the other party's machine.

*2 Transmission speed is based upon the ITU-T No. 1 Test Chart. If the capability of the other party's machine is inferior to your unit, the transmission time may be longer.

*3 Recording time may be reduced by the calling party's background noise.

ITU-T No. 1 Test Chart

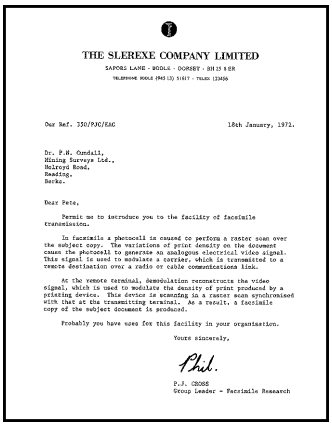

THE SLEREXE COMPANY LIMITED

SAPORS LANE · BOOLE · DORSET · BH15 4DR

TELEPHONE BOOLE (945 13) 51617 · TELEX 123456

Our Ref. 350/PJC/EAC 18th January, 1972.

Dr. P.M. Cundall,
Mining Surveys Ltd.,
Holroyd Road,
Reading,
Berks.

Dear Pete,

Permit me to introduce you to the facility of facsimile transmission.

In facsimile a photocell is caused to perform a raster scan over the subject copy. The variations of print density on the document cause the photocell to generate an analogous electrical video signal. This signal is used to modulate a carrier, which is transmitted to a remote destination over a radio or cable communications link.

At the remote terminal, demodulation reconstructs the video signal, which is used to modulate the density of print produced by a printing device. This device is scanning in a raster scan synchronised with that at the transmitting terminal. As a result, a facsimile copy of the subject document is produced.

Probably you have uses for this facility in your organisation.

Yours sincerely,

P.J. CROSS
Group Leader - Facsimile Research

Paper specifications

Recording paper size:	A4: 210 mm × 297 mm
Recording paper weight:	60 g/m^2 to 90 g/m^2

Note for recording paper:

- Do not use the following types of paper:
  - Paper with a cotton and/or fibre content that is over 20%, such as letterhead paper or paper used for resumes
  - Extremely smooth or shiny paper, or paper that is highly textured
  - Coated, damaged or wrinkled paper
  - Paper with foreign objects attached, such as tabs or staples
  - Paper which has dust, lint or oil stains
  - Paper that will melt, vaporize, discolour, scorch or emit dangerous fumes near 200°C, such as vellum paper. These materials may transfer onto the fusing roller and cause damage.
  - Moist paper
- Some paper only accepts print on one side. Try using the other side of the paper if you are not happy with the print quality or if misfeeding occurs.
- For proper paper feeding and best print quality, we recommend using long-grained paper.
- Do not use paper of different types or thickness at the same time. This may cause a paper jam.
- Avoid double-sided printing.
- Do not use paper printed from this unit for double-sided printing with other copiers or printers. This may cause a paper jam.
- To avoid curling, do not open paper packs until you are ready to use the paper. Store unused paper in the original packaging, in a cool and dry location.

11.2.2 Handset

Standard:	DECT(Digital Enhanced Cordless Telecommunications) GAP(Generic Access Profile)
Number of channels:	120 Duplex Channels
Frequency range:	1.88 GHz to 1.9 GHz
Duplex procedure:	TDMA (Time Division Multiple Access)
Channel spacing:	1,728 kHz
Bit rate:	1,152 kbit/s
Modulation:	GFSK
RF Transmission Power:	Approx. 250 mW
Voice coding:	ADPCM 32 kbit/s

Operating environment:	5°C–35°C, 20%–80% RH (Relative Humidity)
Dimensions:	Approx. height 143 mm × width 48 mm × depth 32 mm
Mass (Weight):	Approx. 120 g

Note:

- Any details given in these instructions are subject to change without notice.
- The pictures and illustrations in these instructions may vary slightly from the actual product.

12.1 Index

#01 Date and time: *23*
#02 Your logo: *24*
#03 Your fax number: *26*
#04 Sending report: *36*, *51*
#06 FAX ring setting: *52*
#06 TAD ring setting: *40*, *52*
#10 Recording time for an incoming message: *52*
#11 Remote operation ID: *52*
#17 Ringer pattern: *52*
#19 Clock display: *52*
#22 Journal report: *36*, *52*
#23 Overseas mode: *52*
#25 Delayed transmission: *52*
#31 Distinctive Ring: *41*, *53*
#34 Quick scan: *35*, *42*, *53*
#36 Receiving reduction: *53*
#39 Display contrast: *53*
#41 Fax activation code: *53*
#42 Message alert: *53*
#43 Recording time alert: *53*
#44 Memory reception alert: *54*
#46 Friendly reception: *54*
#47 Fax voice guidance: *54*
#51 Mailbox 1 password: *54*
#52 Mailbox 2 password: *54*
#54 Greeting time: *54*
#55 Mailbox 1 greeting: *48*
#56 Mailbox 2 greeting: *48*
#58 Original mode: *54*
#60 Message transfer: *49*, *54*
#61 Message transfer greeting message: *49*
#67 Incoming message monitor: *55*
#68 ECM selection: *55*
#70 Pager call: *50*
#76 Connecting tone: *55*
#77 Auto answer: *55*
#80 Reset advanced features: *55*

A Accessories: *10*, *11*
Metal recording paper guide: *16*
Paper tray: *16*
Additional units: *62*
Advanced features: *52*
Auto answer setting (Feature #77): *55*
Auto talk feature: *28*

B Base unit PIN: *60*
Base unit selection: *63*
Basic features: *51*
Battery
Charge: *20*
Installation: *17*
Replacement: *17*
Battery low alarm: *56*
Battery type: *59*
Broadcast transmission: *37*
Button description
Base unit: *12*
Handset: *13*

C Call BAR: *58*
Caller ID: *32*
Calling back: *33*
Storing: *34*
Caller's recording time (Feature #10): *52*
Call restriction: *60*
Call waiting: *33*
Call waiting tone: *56*
Cancelling a base unit: *63*
Cancelling a handset: *62*
Character table: *25*, *29*
Cleaning: *73*
Clock display (Feature #19): *52*
Communication messages: *65*
Conference call: *64*
Connecting tone (Feature #76): *55*
Connections: *19*
Copy: *42*
Collation: *43*
Enlarge: *42*
Reduce: *42*

D Date and time
Base unit (Feature #01): *23*
Handset: *23*
Delayed transmission (Feature #25): *52*
Direct call: *58*
Display (Base unit)
Contrast (Feature #39): *53*
Error messages: *65*
Display (Handset)
Description: *13*
Language: *57*
Standby mode: *57*
Talk mode: *57*
Distinctive Ring service (Feature #31): *41*, *53*
Document size: *36*

E ECM selection (Feature #68): *55*
Error messages: *65*

F Fax activation code (Feature #41): *53*
Fax number (Feature #03): *26*

Fax Stream Duet: *41*
Fax voice guidance (Feature #47): *54*
Friendly reception (Feature #46): *54*

G Greeting message
Message transfer (Feature #61): *49*
TAD/FAX: *44*
Voice mailbox (Feature #55, #56): *48*

H Handset
Locator: *29*
PIN: *58*
Power: *18*
Registration: *62*
Help: *21*
Hold: *28*
Hot key: *30*

I Incoming message monitor (Feature #67): *55*
Ink film
Installing: *14*
Replacing: *15*
Intercom: *64*

J Jams
Document: *72*
Recording paper: *70*
Journal report (Feature #22): *36*, *52*

K Key lock: *27*
Key tone: *56*

L Listening to recorded messages: *45*
From a remote location: *46*
Voice mailbox: *48*, *49*
Logo (Feature #02): *24*

M Message alert (Feature #42): *53*
Message transfer (Feature #60): *49*, *54*

N Navigator directory (Base unit)
Making a phone call: *32*
Selecting characters: *25*
Sending faxes: *36*
Storing: *31*

O Original mode (Feature #58): *54*
Overseas mode (Feature #23): *52*

P Pager call (Feature #70): *50*
Phonebook
Making a phone call: *30*
Storing: *29*
Polling: *40*
Power failure: *70*
Programming
Base unit programming: *51*
Handset programming: *55*

Q Quick scan (Feature #34): *35*, *42*, *53*

R Range warning alarm: *56*
Receiving alert (Feature #44): *54*
Receiving faxes
Automatically: *39*
Manually: *38*
Receiving reduction (Feature #36): *53*
Recording
Greeting message: *44*, *48*, *49*
Memo message: *44*, *49*
Recording paper: *17*
Recording paper size: *77*
Recording time alert (Feature #43): *53*
Recording time for TAD/FAX greeting message (Feature #54): *54*
Redialling
Base unit: *28*, *35*, *37*
Handset: *27*
Redial list: *27*
Remote operation: *46*
Remote operation ID (Feature #11): *52*
Reports
Broadcast programming: *75*
Fax number: *75*
Journal: *36*, *52*, *75*
Power down: *70*
Printer test: *75*
Sending: *36*, *51*
Setup: *75*
Reset
Base unit (Feature #80): *55*
Handset: *59*, *61*
Resolution: *35*, *42*
Ringer mode: *63*
Ringer pattern
Base unit (Feature #17): *52*
Handset: *56*
Ring setting
FAX ONLY (Feature #06): *52*
TAD/FAX (Feature #06): *52*

S Sending faxes
Broadcast: *37*
From memory: *35*
Manually: *35*
Navigator directory: *36*
Sending report (Feature #04): *36*, *51*
Storing
Broadcast: *37*
Hot key: *30*
Navigator directory: *31*
Phonebook: *29*

T Time alarm: *55*
Toll saver: *40*
Transferring a call: *28*, *64*

V Voice mailbox: *47*
Voice mailbox password (Feature #51, #52): *54*
Voice time/day stamp: *45*
Volume
Base unit: *22*
Handset: *21*

Panasonic Communications Co., Ltd.
1-62, 4-chome, Minoshima, Hakata-ku, Fukuoka 812-8531, Japan

PFQX1891YA CM0903CM1113